Frank Zulski
Wade Williams
Jim Kargol
Brent Shank, PE
Engineer-Manager
Lisa Kleeman
Finance Director

2265 E. Hathaway Road
Harbor Springs, MI 49740
Office: (231) 347-8142
Fax: (231) 347-5787
www.emmetcrc.org

Project: **B151 – Click Road Bridge Repair**

Aggregate Base, Erosion Control, Earth Excavation, HMA Surface Removal, Guardrail Salvage, Bridge Superstructure Removal, Install New Piles, Reinstall Bridge Superstructure, Install Salvaged Guardrail, HMA Paving, Traffic Control and Slope Restoration.

The Emmet County Road Commission will accept Bids until **9:00 a.m.** local time on **November 17, 2026** at: 2265 E. Hathaway Road, Harbor Springs, MI 49740. Bid packages are available at the Emmet County Road Commission Office or on Emmet County Road Commission website at www.emmetcrc.org.

ALL BIDS WILL BE SEALED AND PLAINLY MARKED AS TO THE PROJECT AND PROJECT NUMBER. MAILED BIDS MUST BE RECEIVED BY 3:30 P.M. THE PREVIOUS EMMET COUNTY ROAD COMMISSION BUSINESS DAY PRIOR TO BID OPENING.

The bidder has examined the plans, specification, special provisions and related materials in the proposal, as well as the location of the work described in the proposal for this project, and is fully informed as to the nature of the work and conditions relating to its performance and understands that the quantities shown are approximate only and are subject to either increase or decrease.

The bidder hereby proposes to furnish all necessary machinery, tools, apparatus and other means of construction, do all the work, furnish all the materials except as otherwise specified and, or each unit price, lump sum, or one each named in the itemized bid, to complete the work in strict conformity with the plans therefore and the entire proposal which is incorporated by reference in these pages, and in strict conformity with the requirements of the 2020 Standard Specifications for Construction, Michigan Department of Transportation and such other special provisions and supplemental specifications as may be part of the proposal for this project.

The bidder further proposes to do such extra work as may be authorized by the Emmet County Road Commission, prices for which are not included in the itemized bid. Compensation shall be made on the basis agreed upon before such extra work is begun.

THE BIDDER UNDERSTANDS AND AGREES THAT THE EMMET COUNTY ROAD COMMISSION RESERVES THE RIGHT TO REJECT ANY AND ALL BIDS; TO WAIVE IRREGULARITIES OR INFORMALITIES; AND NO CONTRACTUAL RELATIONSHIP SHALL EXIST BETWEEN THE BIDDER AND THE EMMET COUNTY ROAD COMMISSION FOR THE WORK DESCRIBED HEREIN UNTIL SUCH TIME AS THE CONTRACT HAS BEEN FORMALLY EXECUTED BY BOTH THE BIDDER AND THE EMMET COUNTY ROAD COMMISSION.

The Emmet County Road Commission, in accordance with Title VI of the Civil Rights Act of 1964, 78 Stat. 252, 42 U.S.C 2000d to 2000d-4 and Title 49, Code of Federal Regulations, Department of Transportation, Subtitle A, Office the Secretary, Part 21, Nondiscrimination in Federally assisted programs of the Department of Transportation issued pursuant to such Act, hereby notifies all bidders that it will affirmatively insure that in any contact entered into pursuant to this advertisement, minority business enterprises will be afforded full opportunity to submit bids in response to this invitation and will not be discriminated against on the grounds of race, color, or national origin in consideration for an award.

EMMET COUNTY ROAD COMMISSION

PLANS OF PROPOSED ROAD IMPROVEMENTS

Click Road Bridge Repair

SECTION 16 & 21 T 34 N, R 5 W
BEAR CREEK TOWNSHIP
EMMET COUNTY, MICHIGAN



MISS DIG 811

800-482-7171

CONTRACT FOR:
0.03 MILES OF AGGREGATE BASE, EROSION CONTROL, EARTH EXCAVATION, HMA SURFACE REMOVAL, GUARDRAIL SALVAGE, BRIDGE SUPERSTRUCTURE REMOVAL, INSTALL NEW PILES, REINSTALL BRIDGE SUPERSTRUCTURE, INSTALL SALVAGE GUARDRAIL, HMA PAVING, TRAFFIC CONTROL AND SLOPE RESTORATION.

EXCEPT WHERE OTHERWISE NOTED IN THESE PLANS, PROPOSAL, SUPPLEMENTAL SPECIFICATIONS OR SPECIAL PROVISIONS, ALL MATERIALS AND WORKMANSHIP SHALL BE IN ACCORDANCE WITH THE MICHIGAN DEPARTMENT OF TRANSPORTATION 2020 STANDARD SPECIFICATIONS FOR CONSTRUCTION.

EMMET COUNTY ROAD COMMISSION
2265 EAST HATHAWAY ROAD - HARBOR SPRINGS, MI

DESCRIPTION OF WORK

Aggregate Base, Erosion Control, Earth Excavation, HMA Surface Removal, Guardrail Salvage, Bridge Superstructure Removal, Install New Piles, Reinstall Bridge Superstructure, Install Salvaged Guardrail, HMA Paving, Traffic Control and Slope Restoration.

SPECIFICATIONS

The improvements covered by these plans shall be done in accordance with the Michigan Department of Transportation 2020 Standard Specifications for Construction as amended by Supplemental Specifications and Special Provisions.

CONTRACTOR QUALIFICATIONS

Provide the information for the Business located on pages 25 to 35 of the specification **or** a current letter from MDOT granting prequalification **FA, Bridges and Special Structures.** This information is required to be submitted as part of the bid.

PROJECT DATES

A pre-construction meeting will be scheduled by the Emmet County Road Commission prior to project start. All project submittals are to be submitted for review at this meeting.

Project Start Date:	After June 17, 2027.
Project Completion Date:	September 3, 2027 (All Project Items)

Note: The contractor will be allowed to mobilize to the site two weeks prior to June 17, 2027 start date.

The project shall be completed within **Forty-Five (45)** days of starting date.

No work shall start until the Timber Bridge Materials have been delivered to the Road Commission or to the site.

PROJECT SUBMITTALS

The following shall be submitted to the Road Commission Engineer for approval prior to project start:

1. Material Source List (MDOT Form 501)
2. Progress Schedule (must be submitted within 5 days of Contract award)
3. See the Special Provision for Acceptance of HMA Mixtures on Township Projects for submittal requirements (must be submitted prior to paving)
4. Damage Claim Program

Upon project completion, the Contractor shall submit a written “Notice of Completion” to the Engineer. After the Engineer receives the Notice of Completion, the Engineer will inspect the project. The Engineer will provide a list of any deficient items (Punch List) to the Contractor. Final acceptance will only be issued when any deficient items are addressed to the satisfaction of the Engineer. Final acceptance will be provided to the Contractor in writing.

TECHNICAL SPECIFICATIONS ORDER OF PREFERENCE

The technical specifications for the project shall be in accordance with the 2020 Standard Specifications for Construction of the Michigan Department of Transportation, as amended, hereinafter referred to as the "Standard Specifications".

In case of a conflict in the contract, the following establishes the order of precedence:

1. ECRC Proposal and Project Specifications
2. Special Provisions
3. MDOT Supplemental Specifications
4. ECRC Project Plans and Drawings
5. MDOT Standard Plans
6. MDOT Standard Specifications
7. Safety Program

The Engineer has the right to increase or decrease quantities based on unit prices bid. Final quantities will be based on the unit price bid per estimated quantities and can be adjusted by the Engineer without adjustment in unit price bid by Contractor

STANDARD PLANS & SPECIAL DETAILS

The following items shall be constructed in accordance with the referenced Standard Plan or Special Detail (* included in Proposal) listed below unless otherwise specified.

Road Standard Plans

R-60-J	Guardrail Types A, B, BD, T, TD, MGS-8 & MGS-8D
R-62-H	Guardrail Approach Terminal Type 2M
R-66-E	Guardrail Departing Terminal Types B, T & MGS-8
R-74-D	Bumper & Parking Rails and Misc. Wood Posts
R-82-D	Bedding and Filling around Pipe Culverts
R-96-E	Soil Erosion & Sedimentation Control Measures

Pavement Marking Standards

PAVE-905-E	Longitudinal Line Types and Placement

Traffic & Safety Work Zone Special Details

WZD-100-A*	Ground Driven Sign Supports for Temp Signs
WZD-125-E*	Temporary Traffic Control Devices

ADDITIONAL DOCUMENTS

Addition documents attached to Project Specification.

1. Original Bridge Shop Drawings with markups
2. Original Project Plans with markups
3. Detour Plan
4. Wheeler Lumber Parts List proved by ECRC
5. Special Provision for Welding

PROJECT STATIONS

Station	Notes
8+33	POB
9+72	West Bridge Abutment
10+38	East Bridge Abutment
POE	12+09

MAINTAINING TRAFFIC

Traffic shall be maintained during the project through the use of detour, see attached detour route plan. The Contractor shall coordinate operations with contractors performing work on other projects within or adjacent to the Construction Influence Area (CIA).

The Construction Influence Area for this project shall consist of the width of the project right of way, and the width of the right of way on intersecting roads, from a point where advance construction warning signing begins to a point where it ends.

At no time may Traffic Control Stop and Hold traffic, including loaded & unloaded asphalt trucks on the new HMA surface.

Advanced Warning signs shall be in place before any work begins.

Traffic will be maintained by the Contractor in accordance with the 2025 Michigan Manual of Uniform Traffic Control Devices.

Item	Quantity	Unit
Barricade, Type III, High Intensity, Double Sided, Lighted, Furn	6	Ea
Barricade, Type III, High Intensity, Double Sided, Lighted, Oper	6	Ea
Minor Traf Devices	1	LSUM
Plastic Drum, Fluorescent, Furn	40	Ea
Plastic Drum, Fluorescent, Oper	40	Ea
Sign, Type B, Temp, Prismatic, Furn	155	Sft
Sign, Type B, Temp, Prismatic, Oper	155	Sft

PROPOSED IMPROVEMENTS

Guardrail Removal and Installation

Contractor shall remove and salvage enough guardrail and bridge anchorages to complete the repairs to the bridge from each of the 4 bridge quadrants. Contractor shall reinstall all salvaged guardrail materials after HMA Paving is completed. All Labor, Equipment, and materials necessary to remove, salvage and reinstall guardrail shall be paid for as **Guardrail, Anch, Salvage and Erect, Special (Ea).**

Any guardrail material that is damaged during removal, salvaging and reinstallation operations shall be replaced with new material at the contractors expense.

Construction methods must be in accordance with the Section 807 of the MDOT 2020 Standard Specifications for Construction.

HMA Surface, Removal

Pavement shall be removed as marked on plans, the existing wood bridge deck shall not be damaged during HMA Surface Removal operation, payment included as part of **HMA Surface, Rem (Syd)**. Any additional gravel needed to shape the paved approach areas shall be paid for as Aggregate Base (Ton).

Any saw cuts to the existing pavement shall be included as part of **HMA Surface, Rem (Syd).**

Aggregate Base

Aggregate base shall use aggregate 22A or 21AA limestone, unless otherwise specified.

Aggregate Base Application Rate:

Station	Location	Application Rate
8+33 to 9+72	West Bridge Approach	(55 Ton)
10+38 to 12+09	East Bridge Approach	(55 Ton)

Unless otherwise approved by the Engineer, The HMA Paving Contractor shall be required to provide fine grading of the Aggregate Base prior to paving.

Structures, Rem Portions, Modified

All Labor, Equipment, and materials necessary to **dismantle for salvage** the existing Bridge Deck and Railing, Superstructure, Substructure, Pile Cap and any other items necessary to access the piles to be placed shall be paid for as **Structures, Rem Portions, Modified, (1 LSUM).**

The Contractor shall take all precautions in removing hardware connecting the Pile cap to timber pile, deck to pile cap, panel to panel, railing splices, etc. Salvage all except the "Timber Bridge Modification Material" items listed in the Structure, Timber, Modified item below.

Remove nails, spikes, bolts, etc. and handle timber with sufficient care to avoid breaking through portions penetrated by treatment, and thereby exposing untreated wood. Do not use chains, peavies, cant hooks, pickaroons, timber dogs, pike poles, and other pointed tools that would burr, blemish, penetrate, or permanently deform the contacted timber. Use only rope, rubber, or fabric slings.

All cost of replacing damaged timber shall be born by the Contractor without extension of time at the discretion of the Engineer.

Construction methods must be in accordance with subsections 204.03 of the MDOT 2020 Standard Specifications for Construction except as noted herein.

Earth Excavation

All Labor, Equipment, and materials necessary to excavate and expose the abutment walls of shall be paid for as **Excavation, Earth (Cyd).**

Excavated material shall be salvaged and reused for backfilling bridge abutments. In the event that there is surplus material or material deemed unsuitable by the engineer, contractor shall dispose of material in accordance with subsections 205.03.P of the MDOT 2020 Standard Specifications for Construction.

Backfilling Structure

All Labor, Equipment, and materials necessary to backfill the abutment walls of shall be paid for as **Backfill, Structure, CIP (Cyd).**

Riprap Relocate and Replace

Contractor shall remove and salvage or relocate enough existing Riprap necessary to complete Pile installation and other necessary bridge work. Contractor shall replace all existing Riprap matching existing lines and grades on line after Pile installation. All Labor, Equipment, and materials necessary to remove and salvage or relocate and replace existing Riprap shall be paid for as **Riprap Relocated and Replace, Special (Ft).**

Construction methods must be in accordance with the Section 813 of the MDOT 2020 Standard Specifications for Construction.

Pile Installation

All Labor, Equipment, dewatering and materials necessary to install new piles shall be paid for as part of **Pile Driving Equipment, Furn (LSUM), Pile, Steel, Furn and Driven 12 inch (Ft)**, **Test Pile, Steel, 12 inch (Ea), Structural Steel, Plate Erect (Lb)** and **Structural Steel, Plate, Furn and Fab (Lb), Pile, Steel, Splice (Ea).**

Pile Splicing

Pile Splicing is a provisional quantity. If a splice should need to be performed, the contractor shall notify the Engineer. All welding shall be performed according to approved quality control plan as stated below. All Labor, Equipment and materials necessary to complete the splice is paid for at **Pile, Steel, Splice (Ea).**

Construction methods must be in accordance with the section 705 of the MDOT 2020 Standard Specifications for Construction.

Structural Steel Plate, Erect, Furnish and Fabrication

The Engineer will perform visual inspection and acceptance on all welds performed. All welding shall be performed according to approved quality control plan as stated below. All Labor, Equipment and materials necessary to complete the splice is paid for at **Structural Steel, Plate, Erect (Lb)** and **Structural Steel, Plate , Furn and Fab (Lb).**

Construction methods must be in accordance with the section 705 of the MDOT 2020 Standard Specifications for Construction except as noted below in section Quality Control Plan for Welding Pile and Steel Plate.

Quality Control Plan for Welding Pile and Steel Plate

This work consists of furnishing and maintaining a quality control plan (QCP) for welding steel pile to produce

welds that meet American Welding Society D1.1, Structural Welding Code – Steel (AWS D1.1). Ensure the QPC is in accordance with the contract and specifications herein.

Furnish a Pile Welding Quality Control Plan (form 5627) to the Engineer for review and approval a minimum of 10 working days before the start of pile driving. The Engineer will provide approval, objections, or revisions to the proposed QCP within 5 working days of receipt of the QCP.

The QCP must state the scope of work and list all methods, procedures, personnel, equipment, supplies, and facilities necessary to ensure the welded pile splices meet the contract requirements. Administration by a QC Manager is not required.

Visual Tests (VT) of all welds shall be performed by the welder after each pass. The Engineer will perform VT and determine acceptance or rejection of all welds, and prescription of corrective measures to ensure welds meet the contract requirements before INCORPORATING INTO WORK. The Contractor shall complete corrective measures prior to the pile are incorporated into the work.

Welder shall have a minimum of 5 years' experience performing similar welds or demonstrate capabilities on-site in the presence of the Engineer on a sample pile. The Engineer shall have sole discretion to accept or reject personnel as qualified.

Hold a pre-welding meeting to discuss the QCP in detail including roles and responsibilities of all QC staff. All staff listed on the QCP must attend the meeting. Notify the Engineer of the meeting date, time, and location.

Measurement and Payment. All costs associated with furnishing and maintaining an effective QCP shall be **incidental to Pile, Steel, Furn and Driven, 12 inch and Structural Steel, Plate, Erect** pay items in the contract.

Structure, Timber, Modified

All Labor, Equipment, and materials necessary to reassemble materials salvaged in Pay Item Structures, Rem Portions, Modified using the Timber Bridge Modification Material listed below and provided by ECRC shall be paid for as **Structure, Timber, Modified (LSUM).**

Frame and place the treated timber elements as shown in the approved shop drawings included in the plans. Secure ship-lapped joint with drive spikes. Connect transverse spreader beams to multiple deck panels and secure through panels with bolts and locking hardware.

Drive nails and spikes with sufficient force to set the heads flush with the surface of the wood, thus ensuring that the surface is free from deep and frequent hammer marks. Handle lumber and timber with sufficient care to avoid breaking through portions penetrated by treatment and thereby exposing untreated wood. Do not use chains, peavies, cant hooks, pickaroons, timber dogs, pike poles, and other pointed tools that would burr, blemish, penetrate, or permanently deform the contacted timber. Use only rope, rubber, or fabric slings.

The Timber Bridge Modification Material listed below will be supplied by Krenn Bridge, Inc. and provided to the Contractor at: Emmet County Road Commission Garage, 2265 E. Hathaway Road, Harbor Springs, MI 49740.

The Contractors is responsible for loading, transporting and unload these materials. ECRC Staff will load the pile cap materials for transport at the Contractor's request.

Contractor shall coordinate all work with Emmet County Road Commission Project Manager, Travis L. Horrocks. Contractor shall notify the Project Manager a minimum of 14 calendar days prior to mobilizing to project site.

Construction methods must be in accordance with the Section 709 of the MDOT 2020 Standard Specifications for Construction except as noted herein.

CUSTOMER: KRENN TIMBER BRIDGE INC
LOCATION: EMMET MI
PROJECT: CLICK ROAD
TRACKING#: TT24837

MATERIAL: TIMBER BRIDGE MODIFICATION MATERIAL

Stock #	Quantity	Description	Function
A) Q-NAP TREATED TIMBER			
C031203F107	8	3X12-3' FIR #1 RGH Q-NAP	ABUTMENT CAP SPLICE
C031403F107	8	3X14-3' FIR #1 RGH Q-NAP	PIER CAP SPLICE
D040818F107	6	4X8-18' FIR #1 S1E 7" Q-NAP	PIER CAP FILLER
I121206F107	2	12X12-6' FIR #1 RGH Q-NAP	ABUTMENT CAP SPACER
J141406F107	2	14X14-6' FIR #1 RGH Q-NAP	PIER CAP SPACERS.
		Total:A) Q-NAP TREATED TIMBER	
B) HARDWARE			
HD5095	20	DOME HEAD DR.SPIKE 5/8" X 9-1/	PIER PLATE
HD5095	80	DOME HEAD DR.SPIKE 5/8" X 9-1/	SHIPLAP JOINT - SPA
HD5135	20	DOME HEAD DR.SPIKE 5/8" X 13-1	PIER PLATE
HD5135	64	DOME HEAD DR.SPIKE 5/8" X 13-1	SHIPLAP JOINT - SPA
HD6200	20	DOME HEAD DR.SPIKE 3/4" X 20"	DECK TO ABUTMENT CAP
HD6240	20	DOME HEAD DR.SPIKE 3/4" X 24"	PIER PLATE
HG6240	60	DOME HEAD G.R.BOLT 3/4" X 24"	SPREADER BEAM - SPAN
HG6280	60	DOME HEAD G.R.BOLT 3/4" X 28"	SPREADER BEAM - SPAN
HM6180	100	MACHINE BOLT 3/4" X 18"	CAPS TO STEEL PLATE
HM6200	16	MACHINE BOLT 3/4" X 20"	ABUTMENT CAP SPLICE
HM6220	16	MACHINE BOLT 3/4" X 22"	PIER CAP SPLICE
HM6260	18	MACHINE BOLT 3/4" X 26"	PILE STAY TO CAP
HN851	15	NAIL R.S. HDG 3/8" X 8" 3.5PCS/#	PIER CAP FILLER
HU611	120	HVY.HEX ANCO LOCK NUT 3/4"	SPREADER BEAMS
HW611	200	CUT WASHER 3/4"	CAPS TO STEEL PLATE
HW681	18	PLATE WASHER 3/4", 3" X 3" X 5/1	PILE STAY TO CAP
HW681	32	PLATE WASHER 3/4", 3" X 3" X 5/1	PIER CAP SPLICE
HW681	32	PLATE WASHER 3/4", 3" X 3" X 5/1	ABUTMENT CAP SPLICE
HW681	120	PLATE WASHER 3/4", 3" X 3" X 5/1	SPREADER BEAMS
SM200	20	SPLICE PLATE 2-1/2" X 30" X 3/1	PIER PLATE
		Total:B) HARDWARE	
C) MISCELLANEOUS			
FC999	1	FREIGHT	
HS301	8	NELSON COMPOSITE SHIM WC8(BOX,32	SPREADER BEAMS
HV0005	1	DRILL BIT PACKAGE - BRIDGE	
IC461	1	COPPER NAPHTHENATE 5-GAL	
		Total:C) MISCELLANEOUS	
D) ADDITIONAL REPAIR MATERIAL			
D040510F117	16	4X5-10' FIR #1 S1S Q-NAP	SHIPLAP PLANK
D040730F117	8	4X7-30' FIR #1 S1S Q-NAP	SHIPLAP PLANK
HE6180	6	EYEBOLT, DF 3/4" X 18"	DECK LIFTING
HL4040	300	HEX LAG 1/2" X 4"	BACKING TO H-PILE
HN851	40	NAIL R.S. HDG 3/8" X 8" 3.5PCS/#	SHIPLAP PLANK
HW411	300	CUT WASHER 1/2"	BACKING TO H-PILE
HW651	6	LOCK WASHER 3/4"	DECK LIFTING
HW681	6	PLATE WASHER 3/4", 3" X 3" X 5/1	DECK LIFTING
		Total:D) ADDITIONAL REPAIR MATERIAL	

HMA Paving

See the attached Special Provision for Acceptance of HMA Mixture for HMA mixture specifications.

HMA APPLICATION TABLE					
Label	**Mix**	**Application Rate** (Lbs/Syd)	**Design Performance Grade**	**Comments**	**Pay Item**
T	HMA, 4EL	165 - 220	58-28	Top Course	HMA, 4EL
L	HMA, 4EL	165 -220	58-28	Leveling Course	HMA, 4EL
1	AWI = 220 for all HMA, 4EL, HMA, 5EL and Ultra-thin.				
2	Apply HMA Bond Coat at 0.10 gallons per square yard between paving courses or as directed by the Engineer. Paid for as part of other HMA items.				

Where applicable, or as directed by the Engineer, an acceptable form of grade control (automation) shall be used with the paver at all times.

Bond coat shall not be applied to the wood bridge deck.

Slope Restoration

When placing the topsoil, material shall be placed directly on the shoulder. Topsoil material may not be placed on the asphalt. Shoulder material shall be flushed to the edge of gravel shoulder and blended to the existing shoulder on the outside as to not create a secondary front slope. Topsoil shall be wheel rolled with heavy equipment for density.

A sample fertilizer bag and seed ticket, from the materials used on the project, must be submitted to the Engineer within 7 days of completion of restoration.

Seed Mixture shall be TDS or equivalent.

Chemical fertilizer nutrient, Class B

The following percentages of furnished and salvaged topsoil are estimates for this project and provided for informational purposes only.

Topsoil Furnished: 90 percent
Topsoil Salvaged: 10 percent

Place Mulch and Mulch Anchoring on all topsoil surfaces. Mulch material shall be straw.

Culverts, driveways, spillways and rip rap shall be free and clean of straw upon completion of mulching activities

ITEMS OF WORK

Item	Quantity	Unit
Structures, Rem Portions, Modified	1	LSUM
Excavation, Earth	140	Cyd
Backfill, Structure, CIP	110	Cyd
Aggregate Base	50	Ton
HMA Surface, Rem	490	Syd
HMA, 4EL	110	Ton
Pile Driving Equipment, Furn	1	LSUM
Pile, Steel, Furn and Driven, 12 inch	2100	Ft
Test Pile, Steel, 12 inch	2	Ea
Pile, Steel, Splice	1	Ea
Structural Steel, Plate, Erect	2200	Lb
Structural Steel, Plate, Furn and Fab	2200	Lb
Structure, Timber, Modified	1	LSUM
Guardrail, Anc, Salvage and Erect, Special	4	Ea
Riprap Relocate and Replace, Special	90	Ft
Slope Restoration, Non-Freeway, Type A	200	Syd

MISCELLEANOUS ITEMS OF WORK

Item	Quantity	Unit
Mobilization, Max $46,000	1	LSUM
Erosion Control, Silt Fence	80	Ft
Erosion Control, Turbidity Curtain, Deep	120	Ft

GENERAL NOTES

All work being performed will be conducted in the safest manner possible and appropriate PPE shall be used at all times. All work shall be done in accordance with the Michigan Department of Transportation 2020 Standard Specification for Construction. Contractor assumes all responsibilities for Quality Control (QC) to assure the plans and specifications are met per the contract and to provide professional craftsmanship in each task being performed. Any errors in plans or discrepancies found in the field shall be brought to the engineer's attention immediately. All materials shall meet the requirements of the Michigan Department of Transportation Materials Source Guide.

The Emmet County Road Commission, in accordance with Title VI of the Civil Rights Act of 1964, 78 Stat. 252, 42 U.S.C 2000d to 2000d-4 and Title 49, Code of Federal Regulations, Department of Transportation, Subtitle A, Office the Secretary, Part 21, Nondiscrimination in Federally assisted programs of the Department of Transportation issued pursuant to such Act, hereby notifies all bidders that it will affirmatively insure that in any contact entered into pursuant to this advertisement, minority business enterprises will be afforded full opportunity to submit bids in response to this invitation and will not be discriminated against on the grounds of race, color, or national origin in consideration for an award.

MISS DIG / Underground Utility Notification

For the protection of underground utilities and in compliance with MCL 460.171 et seq, the Contractor shall contact MISS DIG System, Inc. by phone at 811 or 800-482-7171 or via the web at either elocate.missdig.org for single addresses or rte.missdig.org, a minimum of 3 working days prior to excavating, excluding weekends and holidays.

AT&T
Jeff Collard
(231) 347-8010

DTE
Matt Logan
(231) 258-3785

CENTURY LINK
Lance Gow
(231) 548-9930

GREAT LAKES ENERGY
William LaTourneau
(231) 487-1339

TRUE STREAM
Jeff Wilhelm
(231) 487-1356

CHARTER COMMUNICATIONS
Construction Coordinator
(616) 402-2700

CONSUMERS ENERGY
Dale Jacobs
(989) 370-6570

The existing utilities listed above and, on the plans, represent the best information available. This information does not relieve the Contractor of the responsibility to be satisfied as to its accuracy and the location of existing utilities.

Dust Control

The Contractor shall be responsible for controlling the dust on this project. Payment for Dust Control shall be paid for in other items. Dust shall be continuously controlled to the satisfaction of the Engineer.

Soil Erosion Measures

The Contractor shall implement and maintain the soil erosion control measures as shown on the plans before and at all times during construction of this project. All SESC measures shall conform to current MDOT standards, manufacture guidelines and established best practices.

Daily inspections shall be made by the Contractor; periodic inspections shall be made by the Engineer to determine the effectiveness of the SESC measures. Any required corrections shall be made without delay.

All permanent erosion control measures shall be permanently maintained by the Emmet County Road Commission.

Site Cleanup

The Contractor shall keep the work site clean of trash and other debris. At the end of each day, the project shall be inspected, and all trash removed. No payment shall be made for this work.

Bonding Requirements

The successful Contractor shall furnish a performance bond equal to the contract price as assurance for faithful contract performance.

The Contractor shall also furnish a separate ***surety bond*** equal to the contract price as security for payment to all persons performing labor and furnishing materials in connection with this contract. The Contractor shall pay the premium for all bonds.

The bonds must meet requirements of Michigan Law.

Bonds shall be submitted and approved before contract execution.

Insurance requirements

The Contractor shall furnish proof of general liability insurance in amounts not less than $2,000,000 each occurrence and general aggregate, proof of automobile liability in amounts not less than $2,000,000 combined single limit for each accident, bodily injury per accident, and property damage per accident, and in amount not less than $1,000,000 for bodily injury per person. Such proof of insurance shall include a valid certificate of insurance demonstrating that the Emmet County Road Commission is additional insured party on the policy. Such insurance shall cover a period not less than the term of the project and shall provide that it cannot be cancelled without 30 days advanced written notice to the Emmet County Road Commission, by certified mail, first class, return receipt requested. The Contract/Project Agreement will be invalid if insurance expires during the authorized period of work described.

In addition to any liability or obligation by the Contractor that may otherwise exist, Contractor shall, to the fullest extent permitted by law, indemnify and hold harmless the Emmet County Road Commission and its commissioners, officers, agents and employees from and against any and all claims, actions, proceedings, liabilities, losses, and damages thereof, and any and all costs and expenses, including legal fees, associated therewith which the Emmet County Road Commission may sustain by reason of claims for or allegations of negligence or violation of the terms and conditions of the Contract/Project Agreement, arising out of the work which is subject of the Contract.

Liquidated Damages

Liquidated damages will be assessed for failure to complete this project by the specified date, or by the allowed number of days specified once work begins, due to lack of effort, poor organization or ability to perform on the Contractor's part. Liquidated Damages may be waived by the Project Engineer. Liquidated damages will be assessed according to the table below:

Project Award Amount	Liquidated Damages
$0 - $150,000	$500 per Calendar Day
$150,001 - $500,000	$750 per Calendar Day
Over $500,000	$1,000 per Calendar Day

BID SHEET

Board of Emmet County Road Commissioners
2265 East Hathaway Road
Harbor Springs, MI 49740

The undersigned proposes to furnish any and all materials, labor, and equipment necessary for the Rehabilitation of the Click Road Bridge over Bear River as described in the "Invitation to Bid" for the prices below.

The Emmet County Road Commission reserves the right to reject any and/or all bids based on what is in the best interest of Emmet County.

Contractor Name:_____

Project: B151 – Click Road Bridge Repair

Item	Quantity	Unit	Unit Price	Subtotal
Mobilization, Max $46,000	1	LSUM		
Structures, Rem Portions, Modified	1	LSUM		
Excavation, Earth	140	Cyd		
Backfill, Structure, CIP	110	Cyd		
Erosion Control, Silt Fence	80	Ft		
Erosion Control, Turbidity Curtain, Deep	120	Ft		
Aggregate Base	50	Ton		
HMA Surface, Rem	490	Syd		
HMA, 4EL	110	Ton		
Pile Driving Equipment, Furn	1	LSUM		
Pile, Steel, Furn and Driven, 12 inch	2100	Ft		
Test Pile, Steel, 12 inch	2	Ea		
Pile, Steel, Splice	1	Ea		
Structural Steel, Plate, Erect	2200	Lb		
Structural Steel, Plate, Furn and Fab	2200	Lb		
Structure, Timber, Modified	1	LSUM		
Guardrail, Anc, Salvage and Erect, Special	4	Ea		

Barricade, Type III, High Intensity, Double Sided, Lighted, Furn	6	Ea		
Barricade, Type III, High Intensity, Double Sided, Lighted, Oper	6	Ea		
Minor Traf Devices	1	LSUM		
Plastic Drums, Fluorescent, Furn	40	Ea		
Plastic Drums, Fluorescent, Oper	40	Ea		
Sign, Type B, Temp, Prismatic, Furn	155	Sft		
Sign, Type B, Temp, Prismatic, Oper	155	Sft		
Riprap Relocate and Replace, Special	90	Ft		
Slope Restoration, Non-Freeway, Type A	200	Syd		
			TOTAL =	

Bidder: _____ Address: _____

_____ _____

Signature: _____ Phone No.: _____

Printed Name: _____ Date: _____

Title: _____ Email: _____

Emmet County Road Commission
Special Provision
For
HMA Mixture Acceptance

ECRC: RBS 01/03/22

a) **Description**

This Special Provision provides acceptance-testing requirements for use on this project. The HMA mixture shall be provided to meet the requirements of the standard specifications for construction except where modified herein. The HMA mixture quality assurance and acceptance shall conform to Section 501 of the 2020 Michigan Department of Transportation Standard Specifications for Construction except where modified herein. The MDOT HMA Production Manual, current edition, applies to this work.

b) **Submittals**

The contractor shall submit the following:

1. Job Mix Formula (MDOT Form 1911 or equivalent) for the project for review and approval by the Engineer. The Contractor shall not place any HMA without an approved JMF. Below are specific values that are required on the JMF (in addition to the normal requirements).
   a. Fine Aggregate Angularity
   b. RAP Tiering based on JMF values
   c. Fines to Asphalt Ratio (based on Effective Asphalt Content)
   d. Soft Particle Percentage of each JMF Aggregate Type
2. Quality Control Plan.
3. A copy of all Contractor Quality Control Tests submitted within 7 working days of projection completion.
4. A copy of the Bill of Lading or Delivery Ticket for the Asphalt Binder for the project. The Bill of Lading must include the type of material that was previously hauled in the delivery tank.

c) **Materials**

Aggregates, mineral filler (if required), and asphalt binder shall be combined as necessary to produce a mixture proportioned within the master gradation limits and meeting the uniformity tolerances listed Table 1 and the quality assurance testing tolerances in Table 2 of this special provision. The master gradation range is to be used for establishing mix design only. Topsoil, clay or loam shall not be added to aggregates used in plant produced HMA mixtures.

The Maximum Percentage of Soft Particles for any given HMA mixture shall be 5%.
The Minimum Fine Aggregate Angularity for any given HMA mixture shall be 40.0.
The Minimum Crush Percentage for 4EL and 5EL HMA mixtures shall be 65%.

Table A: HMA Mixture Targets and Parameters

HMA Mix Type	VMA Minimum on any given Test (a,c)	VMA Target (c)	Asphalt Binder Content Minimum on JMF	Asphalt Binder Content Minimum on any given Test (a)	Fines to Asphalt Ratio Maximum on JMF (b)
4EL	14.0	Based on mix design parameter, the contractor shall establish & state their VMA Target on their mix design JMF, and shall adhere to the VMA Min. requirements	5.80	5.50	1.10
5EL	15.0		6.10	5.80	1.10
Ultra-Thin	15.5		6.00	5.70	1.20

a. The HMA parameter minimum is per any given QC/QA test, regardless of Tolerances listed in Table 2 of this Special Provision.
b. Value based on Pbe (Effective Asphalt Percent) for each given mix and JMF.
c. VMA values are based on the Gsb (Bulk Specific Gravity) of the given HMA mixture not the Gse (Effective Specific Gravity).

Table B: HMA Mixture Targets and Parameters Cont'd (Ultra-Thin)

Superpave Air Voids (%)	4.5
Superpave Gyrations	35
Fine Aggregate Angularity (Min.)	40.0
Percent Crush (Min. %)	50.0
Aggregate Wear Index (AWI)	220
Sieve Size	**Total % Passing**
1/2 inch	100
3/8 inch	99-100
No. 4	75-95
No. 8	55-75
No.30	25-45
No. 200	3-8

d) **Asphalt Binder**

Liquid Asphalt Binder shall be a Performance Graded (PG) binder as specified in the bid HMA Application Table in the bid specifications and/or as included on the plans. If not specified, then the following apply:

Table C: Asphalt Binder Selection

4EL	PG 58-28
5EL	PG 58-28
Ultra-Thin	PG 58-28

e) **Air Voids**
Design Air Voids shall be 4.0% and shall be regressed to 3.0% in production **by the addition of virgin liquid asphalt (4EL and 5EL).**

f) **Recycled Asphalt Materials**

Recycled Asphalt Shingles (RAS) will not be allowed in the HMA Mixtures.

Recycled Asphalt Pavement (RAP) is allowed in the HMA mixtures subject to the following requirements. Binder replacement will be determined by weight. ***The use of Reclaimed Asphalt Pavement (RAP) shall be limited to Tier 1 (0% to 17%) RAP binder by weight of the total binder in the mixture, for all mixes (4EL, 5EL, and Ultra-Thin).***

Tier 1 – 0.0% to 17.0% RAP binder by weight of the total binder in the mixture
No binder grade adjustment is required to compensate for the stiffness of the asphalt binder in the RAP.

g) **Construction**
After the Job Mix Formula is established, the aggregate gradation of the HMA mixture furnished for the work shall be maintained within the Range 1 uniformity tolerance limits permitted for the job-mix-formula specified in Table 1. However, if deviations are predominantly below or above the job-mix-formula, the Engineer may order alterations in the plant to bring the mixture to the job-mix-formula. If two consecutive aggregate gradations on one sieve as determined by the field tests are outside Range 1 but within Range 2 tolerance limits, the Contractor shall suspend all operations. Contract time will continue during these times when the plant is down. Before resuming any production, the Contractor shall propose, for the Engineer's approval, all necessary alterations to the materials or plant so that the job-mix-formula can be maintained. The Engineer, after evaluating for effects on AWI and mix design properties, will approve or disapprove such alterations.

The crushed particle content of the aggregate used in the HMA mixture shall not be more than 10 percentage points below the crushed particle content used in the job-mix-formula nor less than the minimum specified for the aggregate in the project documents.

Random Liquid Asphalt Binder samples will be witnessed by the Engineer or Consulting Firm. The Engineer reserves the right to test any or all samples taken.

Quality Assurance and Acceptance testing will be as follows:

1. **Asphalt Mixture Sampling**
Acceptance sampling and testing will be performed by the Engineer using the sampling method and testing option agreed upon by the Engineer and Contractor. Each day of production,

random samples will be obtained for each mix type. Acceptance testing will be performed at a frequency specified by the Engineer.

For each given day of production, if the daily mix tonnage per HMA mix type is under 500 tons, the Engineer reserves the right to test one sample and obtain a second sample for future testing if necessary. If the daily mix tonnage per HMA mix type is over 500 tons, the Engineer reserves the right to test one sample. If the first sample meets the Range 1 tolerances in Table 1 and Table 2, the Engineer can obtain a second sample and perform any of the following actions:

a. Perform Full Quality Assurance testing
b. Perform Volumetric Testing Only (Ignition, Extracted, or Calculated AC/Gmm, Air Voids, VMA)
c. Retain custody of the sample for future testing if necessary

2. **Asphalt Binder Sampling**

The Contractor shall obtain the asphalt binder sample, correctly label the sample container and complete a Sample Identification (Bituminous Material Form 1923B). The form must be filled out correctly, completely, and signed before the sample is given to the Engineer. The daily asphalt binder sample must be taken from a sampling spigot located on the pipeline supplying asphalt binder to the plant, in a position between the asphalt binder pump and the point where the asphalt binder is introduced to the aggregate mixture. Personnel safety is critical when collecting the sample from the sampling spigot. Give the binder sample and completed Form 1923B to the Engineer.

Daily Asphalt Binder Sample are to be in 1 pint (16 ounce), slip top, seamless ointment tins. The tin must be at least three quarters full. All containers must be labeled in a legible format with the following information provided:

a. Project Name
b. Binder Grade
c. Binder Supplier Certification Number
d. Supplier Name, City, and State
e. Date Sampled
f. Mixture Type

The Engineer may request to witness the sampling of the asphalt binder upon visit to the HMA Plant. The Engineer will complete the 1923B Form for the witness sample. The witness sample will be recorded as the daily asphalt binder sample. Any other asphalt binder samples from that same day will be discarded.

The Engineer may request a copy of the MDOT Binder Certification Documents. These copies must be presented to the Engineer when the respective daily binder samples and the 1923B Forms are picked up at the plant. The Engineer will review these documents and communicate any problems that may arise.

3. **Mixture Testing**
   Mixture samples will be tested to verify gradation, binder content, and volumetric properties per Table 1 and Table 2 listed below.

   If the Engineer elects not to perform Quality Assurance testing on a given day or a given project. The Contractor is required to still perform testing in accordance with Table 1 and Table 2 below. The Contractor's Quality Control test results shall be sent to the Engineer within 2 working days of each day's productions for a given HMA mixture.

Table 1: Quality Assurance/Control Tolerance Limits for HMA Mixtures

Parameter	Action Limits (Range 1)	Suspension Limits (Range 2)
% Passing the #8 and Larger Sieves	+/- 5.0%	+/- 8.0%
% Passing the #30 Sieve	+/- 4.0%	+/- 6.0%
% Passing #200 Sieve	+/- 1.0%	+/- 2.0%

Table 2: Quality Assurance/Control Testing Tolerance (+/-) from JMF or Target Values

Parameter	Action Limits (Range 1)	Suspension Limits (Range 2)
Binder Content (a)	0.30% (a)	0.50% (a)
Maximum Specific Gravity (Gmm)	0.013	0.020
Voids in Mineral Aggregate VMA (a,b)	0.75% (a,b)	0.80% (a,b)
Air Voids (c)	0.60%	0.90%
Fines to Effective Asphalt Ratio	0.65-1.20	0.60-1.25

a. Refer to minimum parameters in Table A of this special provision.
b. These given limits are (+/-) from given targets in Table A of this special provision.
c. Limits are (+/-) from JMF/Target Values listed in Section e. and Table B of this special provision.

4. **Density**
   Pavement density will be measured by the Engineer, with a Nuclear Density Gauge, using the Gmm from the JMF for the density control target. The in-place density of the HMA mixture shall be at least 92.0% of the density control target. In-place density will be calculated by averaging four QA density test locations. Test locations will not be taken within 12 inches of any pavement edges or pavement joints.

h) **Rejected Materials**

1. **Gradation**
   Action Limits - Range of values established in Table 1 – Quality Assurance/Control Tolerance Limits for HMA Mixtures. If exceeded on two consecutive tests, Contractor is required to take corrective action to bring the mixture produced into conformance with the specifications.

Suspension Limits – Range of values established in Table 1 – Quality Assurance/Control Tolerance Limits for HMA Mixtures. If exceeded on a single test, Contractor is required to suspend operations and determine, document, and correct the cause before resuming production. Prior to resuming production, the Engineer must be notified of the findings and approve correction action prior to resuming production.

2. **Asphalt Binder**
   If a liquid asphalt binder sample does not meet the required specification, the mix produced from the point of the last liquid asphalt binder sample meeting specification to the failed sample shall be considered defective and shall be replaced at the sole expense of the Contractor.

3. **Volumetric Properties**
   The acceptable tolerance for Binder Content, Gmm, VMA, Air Voids, and Fines to Pbe are listed in Table 2 above. Any HMA Mixture produced outside of these tolerances or any HMA Mixture that does not meet the requirements listed in the sub notes of Table 2 above will be subject to a negative adjustment or rejected. The resulting penalty will be a negative adjustment of 10% to 50% or remove/replace, to be determined by the Engineer.

4. **Pavement Density**
   A negative 10% adjustment in the HMA Mixture contract price will be imposed if the pavement density (average of all gauge readings) is less than 92%, but equal to or greater than 91%; or if 2 or more readings are less than 91%.

   A negative 25% adjustment in the HMA Mixture contract price will be imposed if the pavement density (average of all gauge readings) is less than 91%, but equal to or greater than 90%; or if 2 or more readings are less than 90%.

   If the average density is less than 90% (for all gauge readings), the Contractor shall remove and replace the pavement at no cost to the Owner.

20TM816-A385-05: 08-19-25

MICHIGAN
DEPARTMENT OF TRANSPORTATION

SPECIAL PROVISION
FOR

SLOPE RESTORATION, NON-FREEWAY

RSD:NJM 23 of 35 APPR:DMG:KJK:08-19-25

a. Description. This work consists of preparing all lawns and slopes on non-freeway projects designated for slope restoration on the plans or as directed by the Engineer and applying topsoil, fertilizer, seed, mulch with mulch anchor, mulch blanket, high velocity mulch blanket, permanent turf reinforcement mat, bonded fiber matrix, or modified mulch blanket to those areas. Ensure turf establishment is in accordance with section 816 and 917 of the Standard Specifications for Construction and Standard Plan R-100 Series, except as modified herein or otherwise directed by the Engineer.

b. Materials. The materials, application rates, and construction methods specified in sections 816 and 917 of the Standard Specifications for Construction apply unless modified by this special provision or otherwise directed by the Engineer. Furnish the following materials on this project:

1. Seeding mixture as called for on the plans.

2. Chemical fertilizer nutrient, Class B.

3. Topsoil. The following percentages of furnished and salvaged topsoil are estimated for this project and provided for informational purposes only.

Topsoil Furnished: 90 percent

Topsoil Salvaged: 10 percent

4. Mulching materials.

c. Construction. Ensure construction methods are in accordance with subsection 816.03 of the Standard Specifications for Construction. Begin this work as soon as possible after final grading of the areas shown on the plans for slope restoration but no later than the time limitations in accordance with subsection 208.03.B of the Standard Specifications for Construction. It may be necessary, as directed by the Engineer, to place materials by hand.

Shape, compact, and ensure all areas to be seeded are weed-free prior to placing topsoil. Place topsoil to the minimum depth of 4 inches and in accordance with the plans and standard specifications to meet proposed finished grade. If the area being restored requires more than the minimum depth of topsoil to meet finished grade, fill this additional depth using topsoil or, at the Contractor's option, embankment. Furnishing and placing this additional material is included in this item of work for slope restoration.

Ensure topsoil is weed and weed seed free and friable prior to placing seed. Remove any stones greater than 1/2-inch in diameter or other debris. Apply seed mixture and fertilizer to prepared soil surface at the specified rates. Incorporate seed into top 1/2-inch of topsoil.

Spread mulch at a rate of two tons per acre. If the Engineer allows dormant seeding spread mulch at a rate of 3 tons per acre. Place mulch anchoring over the mulch at a rate in accordance with subsection 816.03.F of the Standard Specifications for Construction. Place mulch blanket and high-velocity mulch blanket in accordance with subsection 816.03.G of the Standard Specifications for Construction and Standard Plan R-100 Series.

Install areas constructed with the TRM on prepared (seeded) grades as shown on the plans in accordance with the manufacturer's published installation guidelines. Anchor the top edge of the TRM in a minimum six-inch deep trench. Operation of equipment on the slope is prohibited after placement of the TRM. No credit for splices, overlaps, tucks, or wasted material will be made.

Mix the BFM and organic binders thoroughly at a rate of 40 pounds for each 100 gallons of water or as otherwise recommended by the manufacturer. Hydraulically apply the BFM slurry in successive layers, from two or more directions, to fully cover 100 percent of the soil surface. Ensure the minimum application rate is at least 3000 pounds of BFM for each acre or otherwise apply in accordance with the manufacturer's recommendations as appropriate depending on site conditions.

Do not apply BFM on saturated soil or immediately before, during, or after rainfall.

Install modified mulch blanket in accordance with the manufacturer's published guidelines and as directed by the Engineer.

If an area washes out after this work has been properly completed and approved by the Engineer, make the required corrections to prevent future washouts and replace the topsoil, fertilizer, seed, and mulch treatment. This replacement will be paid for as additional work using the applicable pay items.

If an area washes out for reasons attributable to the Contractor's activity or failure to take proper precautions, replacement will be at no cost to the contract.

The Engineer will inspect the seeded turf to ensure it is well-established, in a vigorous growing condition, contains the species called for in the seeding mixture and acceptance is in accordance with subsection 816.03.K of the Standard Specifications for Construction.

If the seeded turf is not well-established at the end of the first growing season, the Contractor must reseed as detailed herein until the turf is well established and approved by the Engineer at no cost to the contract.

Provide weed control, if weeds are determined by the Engineer to cover more than 10 percent of the total area of slope restoration, in accordance with subsection 816.03.I of the Standard Specifications for Construction. Weed control will be at no additional cost to the contract.

d. **Measurement and Payment.** The completed work, as described, will be measured and paid for at the contract unit price using the following pay items:

e. **Pay Item** **Pay Unit**

Slope Restoration, Non-Freeway, Type __ .....Square Yard

1. Place **Slope Restoration, Non-Freeway, Type A** in all areas not described in the other types of slope restoration and will be measured by area in square yards in place. **Slope Restoration, Non-Freeway, Type A** includes installing Topsoil Surface; Fertilizer, Chemical Nutrient; seeding mixture; Mulch; and Mulch Anchoring.

ARTICLE 1—GENERAL INFORMATION

1.01 Provide contact information for the Business:

Legal Name of Business:			
Corporate Office			
Name:		Phone number:	
Title:		Email address:	
Business address of corporate office:			
Local Office			
Name:		Phone number:	
Title:		Email address:	
Business address of local office:			

1.02 Provide information on the Business's organizational structure:

Form of Business:	☐ Sole Proprietorship ☐ Partnership ☐ Corporation		
☐ Limited Liability Company ☐ Joint Venture comprised of the following companies:			
	1.		
	2.		
	3.		
Provide a separate Qualification Statement for each Joint Venturer.			
Date Business was formed:		State in which Business was formed:	
Is this Business authorized to operate in the Project location?	☐ Yes ☐ No ☐ Pending		

1.03 Identify all businesses that own Business in whole or in part (25% or greater), or that are wholly or partly (25% or greater) owned by Business:

Name of business:		Affiliation:	
Address:			
Name of business:		Affiliation:	
Address:			
Name of business:		Affiliation:	
Address:			

1.04 Provide information regarding the Business's officers, partners, and limits of authority.

Name:		Title:	
Authorized to sign contracts: ☐ Yes ☐ No		Limit of Authority:	$
Name:		Title:	
Authorized to sign contracts: ☐ Yes ☐ No		Limit of Authority:	$
Name:		Title:	
Authorized to sign contracts: ☐ Yes ☐ No		Limit of Authority:	$
Name:		Title:	

ARTICLE 2—LICENSING

2.01 Provide information regarding licensure for Business:

Name of License:			
Licensing Agency:			
License No:		Expiration Date:	
Name of License:			
Licensing Agency:			
License No:		Expiration Date:	

ARTICLE 3—DIVERSE BUSINESS CERTIFICATIONS

3.01 Provide information regarding Business's Diverse Business Certification, if any. Provide evidence of current certification.

Certification	Certifying Agency	Certification Date
☐ Disadvantaged Business Enterprise		
☐ Minority Business Enterprise		
☐ Woman-Owned Business Enterprise		
☐ Small Business Enterprise		
☐ Disabled Business Enterprise		
☐ Veteran-Owned Business Enterprise		
☐ Service-Disabled Veteran-Owned Business		
☐ HUBZone Business (Historically Underutilized) Business		
☐ Other		
☐ None		

ARTICLE 4—SAFETY

4.01 Provide information regarding Business's safety organization and safety performance.

Name of Business's Safety Officer:	

Safety Certifications		
Certification Name	Issuing Agency	Expiration

4.02 Provide Worker's Compensation Insurance Experience Modification Rate (EMR), Total Recordable Frequency Rate (TRFR) for incidents, and Total Number of Recorded Manhours (MH) for the last 3 years and the EMR, TRFR, and MH history for the last 3 years of any proposed Subcontractor(s) that will provide Work valued at 10% or more of the Contract Price. Provide documentation of the EMR history for Business and Subcontractor(s).

Year									
Company	EMR	TRFR	MH	EMR	TRFR	MH	EMR	TRFR	MH

ARTICLE 5—FINANCIAL

5.01 Provide information regarding the Business's financial stability. Provide the most recent audited financial statement, and if such audited financial statement is not current, also provide the most current financial statement.

Financial Institution:		
Business address:		
Date of Business's most recent financial statement:		☐ Attached
Date of Business's most recent audited financial statement:		☐ Attached
Financial indicators from the most recent financial statement		
Contractor's Current Ratio (Current Assets ÷ Current Liabilities)		
Contractor's Quick Ratio ((Cash and Cash Equivalents + Accounts Receivable + Short Term Investments) ÷ Current Liabilities)		

ARTICLE 6—SURETY INFORMATION

6.01 Provide information regarding the surety company that will issue required bonds on behalf of the Business, including but not limited to performance and payment bonds.

Surety Name:			
Surety is a corporation organized and existing under the laws of the state of:			
Is surety authorized to provide surety bonds in the Project location?	☐ Yes ☐ No		
Is surety listed in "Companies Holding Certificates of Authority as Acceptable Sureties on Federal Bonds and as Acceptable Reinsuring Companies" published in Department Circular 570 (as amended) by the Bureau of the Fiscal Service, U.S. Department of the Treasury? ☐ Yes ☐ No			
Mailing Address (principal place of business):			
Physical Address (principal place of business):			
Phone (main):		Phone (claims):	

ARTICLE 7—INSURANCE

7.01 Provide information regarding Business's insurance company(s), including but not limited to its Commercial General Liability carrier. Provide information for each provider.

Name of insurance provider, and type of policy (CLE, auto, etc.):			
Insurance Provider		Type of Policy (Coverage Provided)	
Are providers licensed or authorized to issue policies in the Project location?			☐ Yes ☐ No
Does provider have an A.M. Best Rating of A-VII or better?			☐ Yes ☐ No
Mailing Address (principal place of business):			
Physical Address (principal place of business):			
Phone (main):		Phone (claims):	

ARTICLE 8—CONSTRUCTION EXPERIENCE

8.01 Provide information that will identify the overall size and capacity of the Business.

Average number of current full-time employees:	
Estimate of revenue for the current year:	
Estimate of revenue for the previous year:	

8.02 Provide information regarding the Business's previous contracting experience.

Years of experience with projects like the proposed project:				
As a general contractor:		As a joint venturer:		
Has Business, or a predecessor in interest, or an affiliate identified in Paragraph 1.03:				
Been disqualified as a bidder by any local, state, or federal agency within the last 5 years? ☐ Yes ☐ No				
Been barred from contracting by any local, state, or federal agency within the last 5 years? ☐ Yes ☐ No				
Been released from a bid in the past 5 years? ☐ Yes ☐ No				
Defaulted on a project or failed to complete any contract awarded to it? ☐ Yes ☐ No				
Refused to construct or refused to provide materials defined in the contract documents or in a change order? ☐ Yes ☐ No				
Been a party to any currently pending litigation or arbitration? ☐ Yes ☐ No				
Provide full details in a separate attachment if the response to any of these questions is Yes.				

8.03 List all projects currently under contract in Schedule A and provide indicated information.

8.04 List a minimum of three and a maximum of six projects completed in the last 5 years in Schedule B and provide indicated information to demonstrate the Business's experience with projects similar in type and cost of construction.

8.05 In Schedule C, provide information on key individuals whom Business intends to assign to the Project. Provide resumes for those individuals included in Schedule C. Key individuals include the Project Manager, Project Superintendent, Quality Manager, and Safety Manager. Resumes may be provided for Business's key leaders as well.

ARTICLE 9—REQUIRED ATTACHMENTS

9.01 Provide the following information with the Statement of Qualifications:

A. If Business is a Joint Venture, separate Qualifications Statements for each Joint Venturer, as required in Paragraph 1.02.

B. Diverse Business Certifications if required by Paragraph 3.01.

C. Certification of Business's safety performance if required by Paragraph 4.02.

D. Financial statements as required by Paragraph 5.01.

E. Attachments providing additional information as required by Paragraph 8.02.

F. Schedule A (Current Projects) as required by Paragraph 8.03.

G. Schedule B (Previous Experience with Similar Projects) as required by Paragraph 8.04.

H. Schedule C (Key Individuals) and resumes for the key individuals listed, as required by Paragraph 8.05.

I. Additional items as pertinent.

This Statement of Qualifications is offered by:

Business: _____
(typed or printed name of organization)

By: _____
(individual's signature)

Name: _____
(typed or printed)

Title: _____
(typed or printed)

Date: _____
(date signed)

(If Business is a corporation, a partnership, or a joint venture, attach evidence of authority to sign.)

Attest: _____
(individual's signature)

Name: _____
(typed or printed)

Title: _____
(typed or printed)

Address for giving notices:

_____

_____

_____

Designated Representative:

Name: _____
(typed or printed)

Title: _____
(typed or printed)

Address:

_____

_____

_____

Phone: _____

Email: _____

Schedule A—Current Projects

Name of Organization					
Project Owner			Project Name		
General Description of Project					
Project Cost			Date Project		
Key Project Personnel	Project Manager	Project Superintendent	Safety Manager	Quality Control Manager	
Name					
Reference Contact Information (listing names indicates approval to contacting the names individuals as a reference)					
	Name	Title/Position	Organization	Telephone	Email
Owner					
Designer					
Construction Manager					

Project Owner			Project Name		
General Description of Project					
Project Cost			Date Project		
Key Project Personnel	Project Manager	Project Superintendent	Safety Manager	Quality Control Manager	
Name					
Reference Contact Information (listing names indicates approval to contacting the names individuals as a reference)					
	Name	Title/Position	Organization	Telephone	Email
Owner					
Designer					
Construction Manager					

Project Owner			Project Name		
General Description of Project					
Project Cost			Date Project		
Key Project Personnel	Project Manager	Project Superintendent	Safety Manager	Quality Control Manager	
Name					
Reference Contact Information (listing names indicates approval to contacting the names individuals as a reference)					
	Name	Title/Position	Organization	Telephone	Email
Owner					
Designer					
Construction Manager					

Schedule B—Previous Experience with Similar Projects

Name of Organization				
Project Owner		Project Name		
General Description of Project				
Project Cost		Date Project		
Key Project Personnel	Project Manager	Project Superintendent	Safety Manager	Quality Control Manager
Name				

Reference Contact Information (listing names indicates approval to contacting the names individuals as a reference)					
	Name	Title/Position	Organization	Telephone	Email
Owner					
Designer					
Construction Manager					

Project Owner		Project Name		
General Description of Project				
Project Cost		Date Project		
Key Project Personnel	Project Manager	Project Superintendent	Safety Manager	Quality Control Manager
Name				

Reference Contact Information (listing names indicates approval to contacting the names individuals as a reference)					
	Name	Title/Position	Organization	Telephone	Email
Owner					
Designer					
Construction Manager					

Project Owner		Project Name		
General Description of Project				
Project Cost		Date Project		
Key Project Personnel	Project Manager	Project Superintendent	Safety Manager	Quality Control Manager
Name				

Reference Contact Information (listing names indicates approval to contacting the names individuals as a reference)					
	Name	Title/Position	Organization	Telephone	Email
Owner					
Designer					
Construction Manager					

Schedule C—Key Individuals

Project Manager			
Name of individual			
Years of experience as project manager			
Years of experience with this organization			
Number of similar projects as project manager			
Number of similar projects in other positions			
Current Project Assignments			
Name of assignment		Percent of time used for this project	Estimated project completion date
Reference Contact Information (listing names indicates approval to contact named individuals as a reference)			
Name		Name	
Title/Position		Title/Position	
Organization		Organization	
Telephone		Telephone	
Email		Email	
Project		Project	
Candidate's role on project		Candidate's role on project	

Project Superintendent			
Name of individual			
Years of experience as project superintendent			
Years of experience with this organization			
Number of similar projects as project superintendent			
Number of similar projects in other positions			
Current Project Assignments			
Name of assignment		Percent of time used for this project	Estimated project completion date
Reference Contact Information (listing names indicates approval to contact named individuals as a reference)			
Name		Name	
Title/Position		Title/Position	
Organization		Organization	
Telephone		Telephone	
Email		Email	
Project		Project	
Candidate's role on project		Candidate's role on project	

Safety Manager			
Name of individual			
Years of experience as project manager			
Years of experience with this organization			
Number of similar projects as project manager			
Number of similar projects in other positions			
Current Project Assignments			
Name of assignment		Percent of time used for this project	Estimated project completion date
Reference Contact Information (listing names indicates approval to contact named individuals as a reference)			
Name		Name	
Title/Position		Title/Position	
Organization		Organization	
Telephone		Telephone	
Email		Email	
Project		Project	
Candidate's role on project		Candidate's role on project	
Quality Control Manager			
Name of individual			
Years of experience as project superintendent			
Years of experience with this organization			
Number of similar projects as project superintendent			
Number of similar projects in other positions			
Current Project Assignments			
Name of assignment		Percent of time used for this project	Estimated project completion date
Reference Contact Information (listing names indicates approval to contact named individuals as a reference)			
Name		Name	
Title/Position		Title/Position	
Organization		Organization	
Telephone		Telephone	
Email		Email	
Project		Project	
Candidate's role on project		Candidate's role on project	

EMMET COUNTY ROAD COMMISSION

CLICK ROAD BRIDGE REPAIR

CLICK ROAD OVER BEAR RIVER
SECTIONS 16 & 21, T34N, R5E BEAR CREEK TOWNSHIP
EMMET COUNTY, MICHIGAN



EMMET COUNTY

VICINITY MAP

CLICK ROAD
POSTED SPEED 55 MPH
DESIGN SPEED 55 MPH

AVERAGE DAILY TRAFFIC
PRESENT (2026) 1240 (5% COMM)
FUTURE (2046) 1843 (5% COMM) (EST)

UTILITY CONTACTS

AT&T	DTE	CENTURY LINK
JEFF COLLARD	MATT LOGAN	LANCE GOW
(231)347-8010	(231) 258-3785	(231) 548-9930

GREAT LAKES ENERGY	TRUE STREAM
WILLIAM LATOURNEAU	JEFF WILHELM
(231)487-1339	(231) 487-1356

CHARTER COMMUNICATIONS	CONSUMERS ENERGY
CONSTRUCTION COORDINATOR	DALE JACOBS
(616)402-2700	(989) 370-6570

MDOT STANDARD PLANS

TITLE	PLAN NO
ROAD STANDARD PLANS	
GUARDRAIL TYPES A, B, BD, T, TD, MGS-8 & MGS-8D	R-60-J
GUARDRAIL APPROACH TERMINAL TYPE 2M	R-62-H
GUARDRAIL DEPARTING TERMINAL TYPES B, T & MGS-8	R-66-E
BUMPER & PARKING RAILS AND MISC. WOOD POSTS	R-74-D
BEDDING AND FILLING AROUND PIPE CULVERTS	R-82-D
SOIL EROSION & SEDIMENTATION CONTROL MEASURES	R-96-E
PAVEMENT MARKING STANDARDS	
LONGITUDINAL LINE TYPES AND PLACEMENT	PAVE-905-E
TRAFFIC & SAFETY WORK ZONE SPECIAL DETAILS	
GROUND DRIVEN SIGN SUPPORTS FOR TEMP SIGNS	WZD-100-A*
TEMPORARY TRAFFIC CONTROL DEVICES	WZD-125-E*

GENERAL NOTES

14 THRU 20.

1. PROPOSED WORK ON THESE PLANS ARE OVERLAIN ON THE ORIGINAL PLANS BY KPM ENGINEERING ALSO INCLUDED ON SHEETS 8 THRU 13. THE ORIGINAL BRIDGE WAS CONSTRUCTED IN 2012.
2. ORIGINAL SHOP DRAWINGS OF THE TIMBER BRIDGE SUPPLIED BY WHEELER LUMBER ARE INCLUDED ON SHEETS
3. CURRENT LOAD RATING: PIER NO. 2 PILE NO. 8 AND OTHERS HAVE DETERIORTED. DETERIORATED PILE ADJACENT TO EACH OTHER WERE NOT FOUND BASED ON INVESTIGATION USING RESISTANCE DRILLING COMPLETED IN 2025. THE BRIDGE IS POSTED AT 15-TON BASED ON THE TIMBER PILE CAP SPANNING 10' BETWEEN PILE.
4. DAMAGE TO SUPERSTRUCTURE: THE SUPERSTRUCTURE IS RATED IN GOOD CONDITION. THE CONTRACTOR SHALL TAKE ALL PRECAUTIONS IN REMOVING ALL HARDWARE CONNECTING DECK TO CAP, PANEL TO PANEL, ETC. AVOIDING DAMAGE TO TIMBER ELEMENTS. ALL COSTS OF REPLACING DAMAGED TIMBER SHALL BE BORN BY THE CONTRACTOR WITHOUT EXTENTION OF TIME FOR COMPLETION.

GENERAL PROVISIONS

THE IMPROVEMENTS COVERED BY THESE PLANS SHALL BE DONE IN ACCORDANCE WITH THE PROPOSAL AND ACCOMPANYING SPECIFICATIONS FOR THIS PROJECT INCLUDING THE MICHIGAN DEPARTMENT OF TRANSPORTATION (MDOT) 2020 STANDARD SPECIFICATIONS FOR CONSTRUCTION; MDOT LOCAL AGENCY PROGRAMS GUIDELINES FOR GEOMETRICS; THE MICHIGAN MANUAL OF UNIFORM TRAFFIC CONTROL DEVICES (MMUTCD), 2011; AMERICAN ASSOCIATION OF STATE HIGHWAY AND TRANSPORTATION OFFICIALS (AASHTO) "A POLICY ON GEOMETRIC DESIGN OF HIGHWAYS AND STREETS" 7TH ED, 2018; AASHTO LRFD BRIDGE DESIGN SPECIFICATIONS, 9TH ED.

THE LOCATION OF ALL PUBLIC UTILITIES SHOWN ON THESE PLANS IS TAKEN FROM THE BEST AVAILABLE DATA. OSCEOLA COUNTY ROAD COMMISSION WILL NOT BE RESPONSIBLE FOR ANY OMISSION OR VARIATION FROM THE LOCATIONS SHOWN. PURSUANT TO ACTS 173 & 174 OF THE P.A. OF 2013, AS A CONDITION OF THIS CONTRACT, NOTICE SHALL BE GIVEN TO MISS DIG PRIOR TO UNDERGROUND WORK TO BE PERFORMED IN ACCORDANCE WITH THIS CONTRACT, PHONE (800) 482-7171. UTILITY SERVICE CONNECTIONS ARE NOT SHOWN ON THE PLANS. THE ELEVATIONS SHOWN ON THESE PLANS ARE BASED ON NAVD 83 VERTICAL DATUM. HORIZONTAL DATUM IS BASED ON MICHIGAN STATE PLANE COORDINATE SYSTEM, CENTRAL ZONE. THIS PROJECT HAS BEEN EVALUATED USING THE FAA NOTICE CRITERIA TOOL FOR A STRUCTURE HEIGHT OF 200 FEET ABOVE GROUND LEVEL ELEVATION OF 1157 FEET AND NO PERMITS ARE REQUIRED.

ALL EXPOSED CONCRETE CORNERS SHOWN SQUARE ON THE PLAN SHALL BE BEVELED WITH ¾" TRIANGULAR MOLDINGS EXCEPT AS OTHERWISE NOTED.

THE DESIGN OF THIS STRUCTURE IS BASED ON 1.2 TIMES THE CURRENT AASHTO LRFD BRIDGE DESIGN SPECIFICATION HL-93 LOADING WITH THE EXCEPTION THE THE DESIGN TANDEM PORTION OF THE HL-93 LOAD DEFINITION SHALL BE REPLACED BY A SINGLE 60 KIP AXLE LOAD BEFORE APPLICATION OF THIS 1.2 FACTOR. THE RESULTING LOAD IS DESIGNATED HL-93 MOD. LIVE LOAD PLUS DYNAMIC LIVE LOAD ALLOWANCE DEFLECTION DOES NOT EXCEED $\frac{1}{800}$ OF SPAN LENGTH.

THE DESIGN OF THE FOUNDATION PILING IS BASED ON MATERIAL OF THE FOLLOWING GRADES AND STRESSES:

WOOD PILES fco = 900 PSI

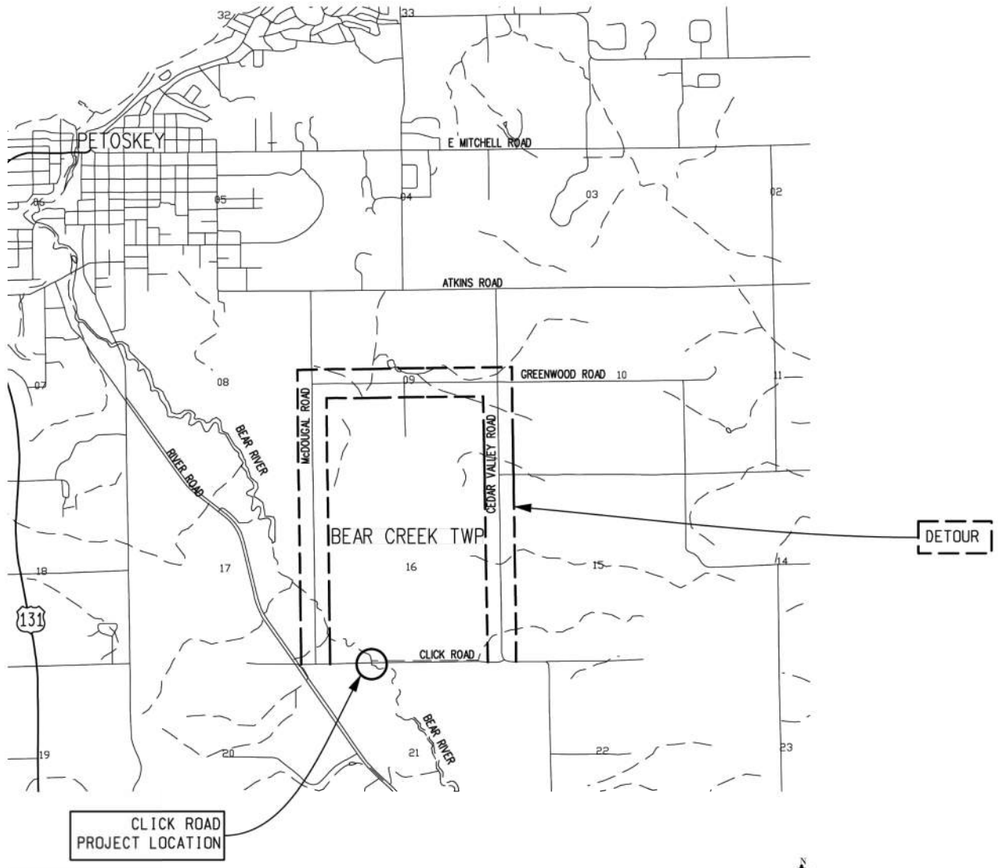

LOCATION MAP

Know what's below. Call before you dig.

INDEX OF DRAWINGS

DESCRIPTION	SHEET NO.
COVER SHEET	1
LOG OF BORINGS - SB-02	2
LOG OF BORINGS - SB-03	3
GENERAL PLAN OF SITE	4
GENERAL PLAN OF STRUCTURE	5
PILE DETAILS	6
MAINTAINING TRAFFIC	7
KPM DESIGN PLANS	8-13
ORIGINAL SHOP DRAWINGS	14-20

CONTRACT FOR: BRIDGE REPLACEMENT AND RELATED APPROACH WORK

EMMET COUNTY ROAD COMMISSION

R. BRENT SHANK, PE _____ DATE _____

Link ENGINEERING SERVICES
7450 SUPPLY ROAD
TRAVERSE CITY, MI 49696
PHONE: (231) 499-9479

PREPARED UNDER THE SUPERVISION OF

BRAD LINK, P.E. _____ DATE _____
REGISTERED PROFESSIONAL ENGINEER NO. 40060

SB–02

LOCATION: 2' OFF WEST BRIDGE ABUTMENT
OFFSET: 11.5 FEET SOUTH OF GUARDRAIL
ELEVATION: 99.82 ft

TEST HOLE DATE 01/21/26

99.82 — 0.0 — 4" ASPHALT
14" ROAD GRAVEL

96.32 — (22 2 2) — 3.5 — FINE TO MED BROWN SAND W/ TRACE GRAVEL

91.32 — (3 5 6) — 8.5

FINE TO MED BROWN SAND W/ TRACE GRAVEL

86.32 — (6 2 2) — 13.5

FINE TO MED BROWN SAND W/ TRACE GRAVEL

81.32 — (13 8 8) — 18.5

FINE TO MED TAN SAND

76.32 — (6 12 19) — 23.5

FINE TO MED TAN SAND

71.32 — (4 10 13) — 28.5

FINE TO MED TAN SAND

66.32 — (4 11 13) — 33.5

65' MIN PILE TIP PENTERTATION

FINE TO MED TAN SAND

61.32 — (4 13 18) — 38.5

SB–02 (CONTINUED)

56.32 — (8 8 11) — 43.5

FINE TO MED TAN SAND

51.32 — (7 16 22) — 48.5

FINE TO MED TAN SAND

50' ESTIMATED PILE TIP PENTERTATION

46.32 — (8 10 11) — 53.5

FINE TO MED TAN SAND

41.32 — (1 2 2) — 58.5

SILTY GRAY CLAY 59.5'

FINE TO MED TAN SAND 62'

36.32 — (2 4 7) — 63.5

FINE TO MED TAN SAND

31.32 — (4 4 5) — 68.5

FINE TO MED TAN SAND

26.32 — (2 2 4) — 73.5

FINE TO MED TAN SAND

21.32 — (5 4 4) — 78.5

FINE TO MED TAN SAND

E.O.B
19.82

NOTES:

BORINGS WERE COMPLETED BY PEARSON DRILLING COMPANY

NUMBERS IN CIRCLES DENOTE NUMBER OF BLOWS REQUIRED TO DRIVE A 2" O.D. (11/2" I.D.) SPLIT SPOON SAMPLER 3 SUCCESSIVE 6" INCREMENTS USING A 140# HAMMER FALLING 30".

(0 0 0) 1st 6" 2nd 6" 3rd 6"

BLOW COUNTS PROVIDED ON THE LOGS ARE FROM THE FIELD.

CONSISTENCY WAS DETERMINED BY INSPECTION OF SAMPLES AND SUBSTANTIATED BY SOILS RESISTANCE TO DRILLING TOOLS.

COHESIONLESS SOIL RELATIVE DENSITIES ARE CLASSIFIED BY N60 VALUES (TO ACCOUNT FOR AUTOMATIC HAMMER EFFIECIENCY) BASED ON THE MDOT GEOTECHNICAL MANUAL SECTION 8, TABLE 4.

COHESIVE SOIL CONSISTENCIES CLASSIFIED BY N60 VALUES (TO ACCOUNT FOR AUTOMATIC HAMMER EFFICIENCY) BASED ON THE MDOT GEOTECHNICAL MANUAL SECTION 8, TABLE 5 AND FROM POCKET PEN MEASUREMENTS.

THE SOIL BORING LOGS REPRESENT POINT INFORMATION. PRESENTATION OF THIS INFORMATION IN NO WAY IMPLIES THAT SUBSURFACE CONDITIONS ARE THE SAME AT LOCATIONS OTHER THAN THE EXACT LOCATION OF THE BORING.

BORING LOCATIONS AND ELEVATIONS BASED ON HORIZONTAL DATUM: NAD83 (2011), EPOCH 2010.00, VERTICAL DATUM: NAVD88, UNITS: INTERNATIONAL FEET.

LL/PL = LIQUID LIMIT/PLASTIC LIMIT, %
WH = WEIGHT OF HAMMER
PP = POCKET PENETROMETER (ksf)
UCS = LABORATORY UNCONFINED COMPRESSIVE STRENGTH (ksf)
MC = NATURAL MOISTURE CONTENT, %
TV = TORVANE (psf)
ST = 3" SHELBY TUBE

Link Engineering Services
7450 SUPPLY RD
TRAVERSE CITY, MI
49696
P: 231.499.9479

NO. | REVISIONS | BY | DATE

EMMET COUNTY ROAD COMMISSION
BEAR CREEK TOWNSHIP, MICHIGAN
CLICK RD OVER BEAR RIVER

LOG OF BORING - SB - 02

SB–03

LOCATION: 2' OFF EAST BRIDGE ABUTMENT
OFFSET: 8.5 FEET SOUTH OF GUARDRAIL
ELEVATION: 99.82 ft

TEST HOLE DATE 01/21/26

99.82 — 0.0 — 5" ASPHALT
13" ROAD GRAVEL
1.5' SAND W/ GRAVEL BASE

96.32 — (8 5 2) — 3.5 — FINE TO MED BROWN SAND W/ TRACE GRAVEL

91.32 — (2 1 1) — 8.5

FINE TO MED BROWN SAND W/ TRACE GRAVEL

86.32 — (2 2 2) — 13.5

FINE TO MED BROWN SAND W/ TRACE GRAVEL

81.32 — (5 3 5) — 18.5

FINE TO MED TAN SAND 21'

76.32 — (1 3 4) — 23.5

FINE TO MED TAN SAND

71.32 — (5 11 16) — 28.5

FINE TO MED TAN SAND

65' MIN PILE TIP PENTERTATION

66.32 — (10 22 23) — 33.5

FINE TO MED TAN SAND

61.32 — (5 10 13) — 38.5

SB–03 (CONTINUED)

FINE TO MED TAN SAND

56.32 — (3 19 29) — 43.5

FINE TO MED TAN SAND

51.32 — (2 3 6) — 48.5

FINE TO MED TAN SAND

50' ESTIMATED PILE TIP PENTERTATION

46.32 — (5 10 12) — 53.5

FINE TO MED TAN SAND

41.32 — (8 7 13) — 58.5

FINE TO MED TAN SAND

36.32 — (3 5 9) — 63.5

FINE TO MED TAN SAND

31.32 — (4 3 3) — 68.5

FINE TO MED TAN SAND

26.32 — (2 2 3) — 73.5

FINE TO MED TAN SAND

E.O.B
24.82

NOTES:

BORINGS WERE COMPLETED BY PEARSON DRILLING COMPANY

NUMBERS IN CIRCLES DENOTE NUMBER OF BLOWS REQUIRED TO DRIVE A 2" O.D. (11/2" I.D.) SPLIT SPOON SAMPLER 3 SUCCESSIVE 6" INCREMENTS USING A 140# HAMMER FALLING 30".

(0 0 0) 1st 6" 2nd 6" 3rd 6"

BLOW COUNTS PROVIDED ON THE LOGS ARE FROM THE FIELD.

CONSISTENCY WAS DETERMINED BY INSPECTION OF SAMPLES AND SUBSTANTIATED BY SOILS RESISTANCE TO DRILLING TOOLS.

COHESIONLESS SOIL RELATIVE DENSITIES ARE CLASSIFIED BY N60 VALUES (TO ACCOUNT FOR AUTOMATIC HAMMER EFFIECIENCY) BASED ON THE MDOT GEOTECHNICAL MANUAL SECTION 8, TABLE 4.

COHESIVE SOIL CONSISTENCIES CLASSIFIED BY N60 VALUES (TO ACCOUNT FOR AUTOMATIC HAMMER EFFICIENCY) BASED ON THE MDOT GEOTECHNICAL MANUAL SECTION 8, TABLE 5 AND FROM POCKET PEN MEASUREMENTS.

THE SOIL BORING LOGS REPRESENT POINT INFORMATION. PRESENTATION OF THIS INFORMATION IN NO WAY IMPLIES THAT SUBSURFACE CONDITIONS ARE THE SAME AT LOCATIONS OTHER THAN THE EXACT LOCATION OF THE BORING.

BORING LOCATIONS AND ELEVATIONS BASED ON HORIZONTAL DATUM: NAD83 (2011), EPOCH 2010.00, VERTICAL DATUM: NAVD88, UNITS: INTERNATIONAL FEET.

LL/PL = LIQUID LIMIT/PLASTIC LIMIT, %
WH = WEIGHT OF HAMMER
PP = POCKET PENETROMETER (ksf)
UCS = LABORATORY UNCONFINED COMPRESSIVE STRENGTH (ksf)
MC = NATURAL MOISTURE CONTENT, %
TV = TORVANE (psf)
ST = 3" SHELBY TUBE

Flink ENGINEERING SERVICES
7450 SUPPLY RD
TRAVERSE CITY, MI
49696
P: 231.499.9479

NO.	REVISIONS	BY	DATE

EMMET COUNTY ROAD COMMISSION
BEAR CREEK TOWNSHIP, MICHIGAN
CLICK RD OVER BEAR RIVER

LOG OF BORING - SB - 03

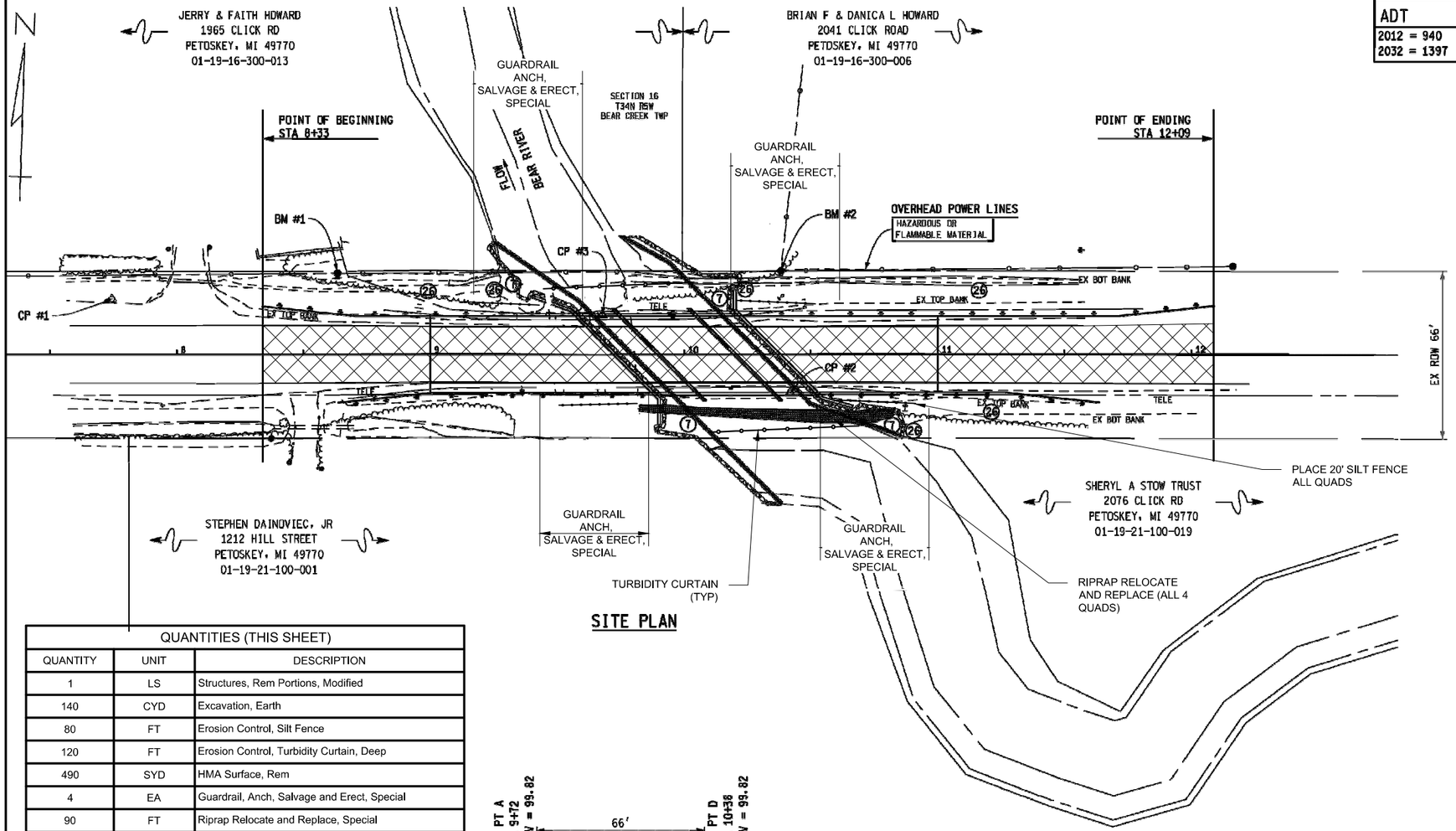

SITE PLAN

ADT
2012 = 940
2032 = 1397

STRUCTURE
66' THREE SPAN X 30' WIDE TIMBER BRIDGE

BENCHMARKS
BM #1 SET SPIKE POWER POLE STA 8+63, 32' LT ELEV 98.34
BM #2 SET SPIKE POWER POLE STA 10+38, 32' LT ELEV 95.65

CONTROL POINTS
CP #1 -SET 1/2" REBAR APPROX STA 7+75, 22' LT N = 5000.00 E = 5000.00 Z = 100.00
CP #2 -SET 1/2" REBAR APPROX STA 10+42, 15' RT N = 4971.45 E = 5268.28 Z = 98.74
CP #3 -SET 1/2" REBAR APPROX STA 9+68, 16' LT N = 5000.00 E = 5193.43 Z = 99.25

SOIL EROSION AND SEDIMENTATION CONTROL ITEMS	
(7)	HEAVY RIPRAP W/GEOTEXTILE LINER
(26)	SILT FENCE

LEGEND

HMA PAVEMENT REMOVAL

QUANTITIES (THIS SHEET)		
QUANTITY	UNIT	DESCRIPTION
1	LS	Structures, Rem Portions, Modified
140	CYD	Excavation, Earth
80	FT	Erosion Control, Silt Fence
120	FT	Erosion Control, Turbidity Curtain, Deep
490	SYD	HMA Surface, Rem
4	EA	Guardrail, Anch, Salvage and Erect, Special
90	FT	Riprap Relocate and Replace, Special

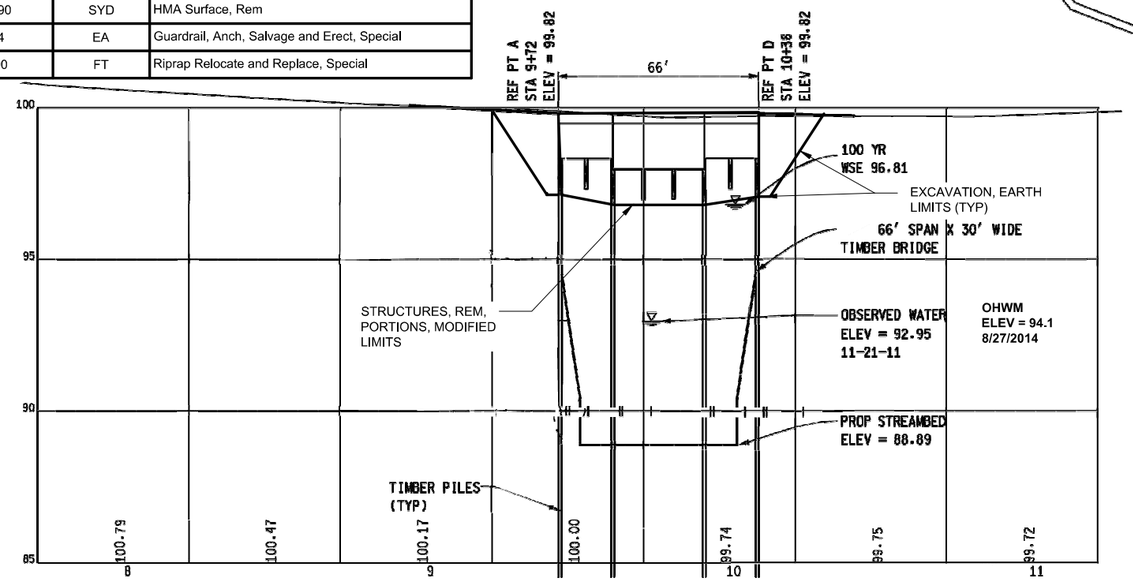

PROFILE AT CONSTRUCTION ℄

CONSTRUCTION NOTES

THE CONTRACTOR SHALL TAKE ALL PRECAUTIONS IN REMOVING ALL HARDWARE CONNECTING DECK TO CAP, PANEL TO PANEL, ETC. AVOIDING DAMAGE TO TIMBER ELEMENTS. ALL COSTS OF REPLACING DAMAGED TIMBER SHALL BE BORN BY THE CONTRACTOR WITHOUT EXTENTION OF TIME FOR COMPLETION AT THE DISCREATION OF THE ENGINEER.

TIMBER CROSS BRACING ON PIERS MAY BE REMOVED ONLY, NOT SLAVAGED AS DIRECTED BY THE ENGINEER INCIDENTAL TO PAY ITEM: STRUCTURES, REM, PORTIONS, MODIFIED.

ABUTMENT PILE SHALL BE INSTALLED TIGHT TO TIMBER BACKER BOARDS. ABUTMENT BACKER BOARDS MAY BE SALAVGED AND REINSTALL AS DIRECTED BY THE ENGINEER INCIDENTAL TO PAY ITEMS: STRUCTURES, REM, PORTIONS, MODIFIED AND STRUCTURE, TIMER, MODIFIED.

THE WORK COVERED BY THESE PLANS INCLUDES REMOVING THE SUPERSTRUCTURE, PILE CAPS, ANCHORAGE RAIL, FOUNDATION EXCAVATION, RELOCATION OF RIPRAP, DRIVING FOUNDATION PILE AND REPLACING THE ABOVE, AND MAINTAINING TRAFFIC.

MEASURES SHALL BE TAKEN TO PREVENT DEBRIS FROM FALLING FROM THE STRUCTURE. IF DEBRIS FALLS INTO THE WATERWAY, IT SHALL BE REMOVED WITHIN 24 HOURS. SINCE DISTURBANCE OF THE WATERWAY BOTTOM MAY BE AS HARMFUL AS THE DEBRIS ITSELF, THE PREVENTIVE MEASURES MUST BE EFFECTIVE.

WATER LEVEL IS SUBJECT TO CHANGE. THE ECRC IS RESPONSIBLE FOR MAKING A DETERMINATION OF WATER LEVELS THAT MAY EXIST DURING CONSTRUCTION.

IMMEDIATELY AFTER CONSTRUCTION OF AN ABUTMENT IS COMPLETED, SLOPE PROTECTION AND SEEDING OR SODDING SHALL BE PLACED ON THE ADJACENT SLOPES.

FOR PROTECTION OF UNDERGROUND UTILITIES AND IN CONFORMANCE WITH PUBLIC ACT 53, 1974, THE ECRC SHALL DIAL 1-800-482-7171 A MINIMUM OF THREE FULL WORKING DAYS, EXCLUDING SATURDAYS, SUNDAYS, AND HOLIDAYS PRIOR TO BEGINNING EACH EXCAVATION IN AREAS WHERE PUBLIC UTILITIES HAVE NOT BEEN PREVIOUSLY LOCATED. MEMBERS WILL THUS BE ROUTINELY NOTIFIED. THIS DOES NOT RELIEVE THE ECRC OF THE RESPONSIBILITY OF NOTIFYING UTILITY OWNERS WHO MAY NOT BE A PART OF THE "MISS DIG" ALERT SYSTEM.

APPROPRIATE SOIL EROSION AND SEDIMENTATION CONTROL MEASURES SHALL BE IN PLACE PRIOR TO EARTH-DISTURBING ACTIVITIES. PLACE TURF ESTABLISHMENT ITEMS AS SOON AS POSSIBLE ON POTENTIAL ERODIBLE SLOPES AS DIRECTED BY THE ENGINEER. CRITICAL DITCH GRADES SHALL BE PROTECTED WITH EITHER SOD OR SEED/MULCH OR MULCH BLANKET AS DIRECTED BY THE ENGINEER.

PLAN ELEVATIONS AND COORDINATES ARE BASED ON A LOCAL DATUM.

Flink ENGINEERING SERVICES
7450 SUPPLY RD
TRAVERSE CITY, MI
49696
P: 231.499.9479

NO.	REVISIONS	BY	DATE

EMMET COUNTY ROAD COMMISSION
BEAR CREEK TOWNSHIP, MICHIGAN
CLICK RD OVER BEAR RIVER

GENERAL PLAN OF SITE

PROPOSED TURBIDITY CURTAIN

CONSTRUCTION NOTES
INSTALL SALVAGED "STRUCTURES REM PORTIONS, MODIFIED" IN-KIND USING "TIMBER BRIDGE MODIFICATION MATERAIL" (SEE PRPOSAL) PROVIDED BY ECRC. TYPICAL CROSS SECTION OF ROADWAY PROVIDED ON ORIGNAL PLANS SHEET 12.

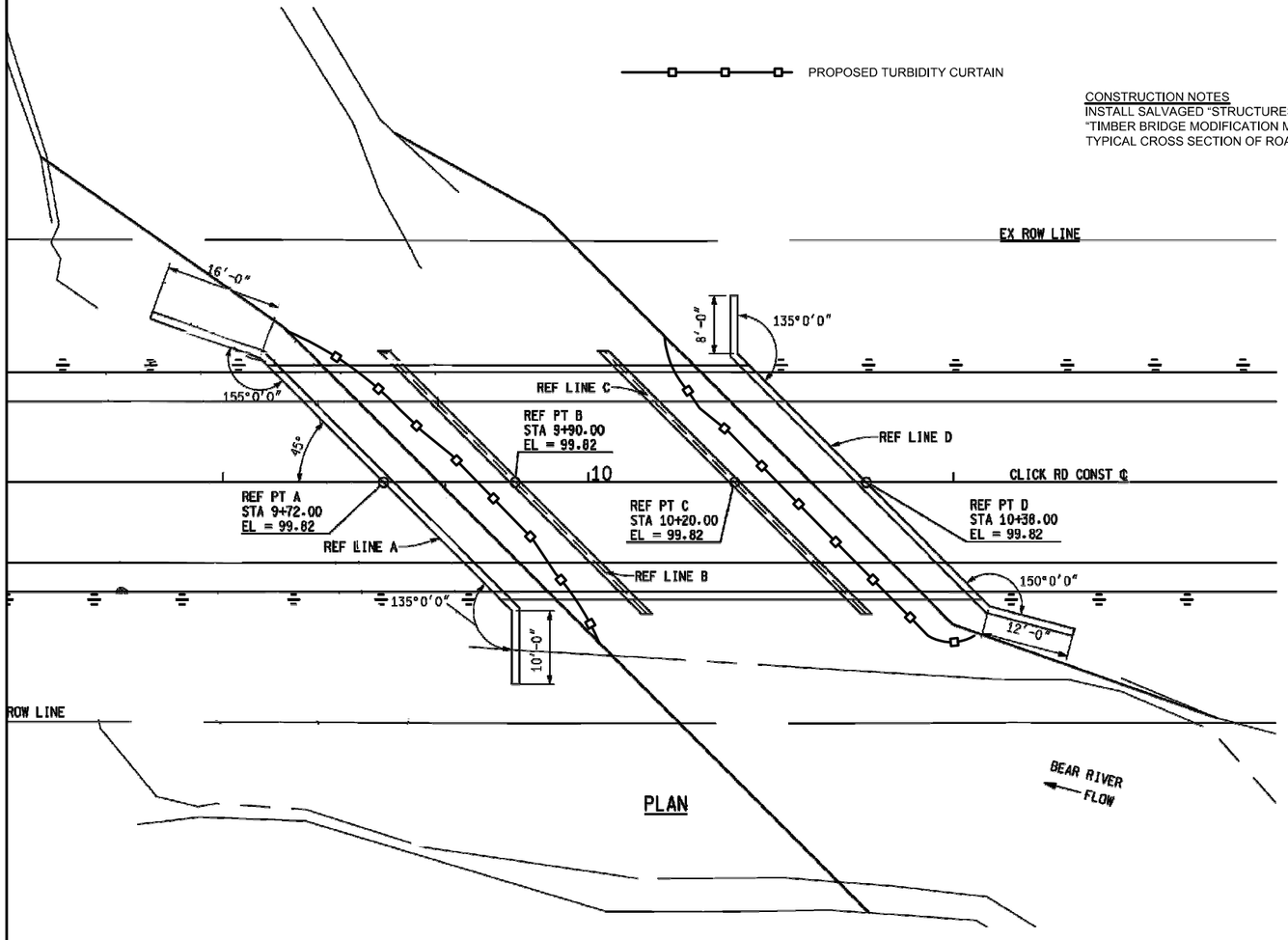

PLAN

SUMMARY OF HYDRAULIC ANALYSIS							
	EXISTING			PROPOSED			
FLOOD DATA	DIS-CHARGE (CFS)	WATER SURFACE ELEV. AT U/S FACE OF STRUCTURE	VELOCITY IN D/S CHANNEL (FPS)	WATER SURFACE ELEV. AT U/S FACE OF STRUCTURE	VELOCITY IN D/S CHANNEL (FPS)	WATERWAY AREA PROVIDED (SFT)	CHANGE IN WS EL 250' U/S OF PROPOSED STRUCTURE
2 YEAR	470	94.6	1.89	94.53	1.64	287.98	-0.05
50 YEAR	950	96.53	2.83	96.35	2.36	405.82	-0.18
100 YEAR	1100	97.06	3.08	96.81	2.55	435.62	-0.26

THE CONTRIBUTING DRAINAGE AREA TO THIS CROSSING IS 107 SQUARE MILES.
THE MAXIMUM BRIGE AREA BELOW LOW CHORD IS 561 SQUARE FEET.

THE WATER SURFACE AND/OR ENERGY GRADE ELEVATIONS SHOWN ON THIS HYDRAULIC TABLE ARE TO BE USED FOR COMPARISON PURPOSES ONLY AND ARE NOT TO BE USED FOR ESTABLISHING A REGULATORY FLOODPLAIN.

QUANTITIES (THIS SHEET)		
QUANTITY	UNIT	DESCRIPTION
110	CYD	Backfill, Structure, CIP
50	TON	Aggregate Base
110	TON	HMA, 4EL
1	LS	Structure, Timber, Modified
90	FT	Riprap Relocate and Replace, Special
200	SYD	Slope Restoration, Non-Freeway, Type A

GEOTEXTILE LINER SHALL BE PLACED ON ALL SLOPES PRIOR TO PLACING RIPRAP. PAYMENT FOR GEOTEXTILE LINER SHALL BE INCLUDED IN PAYMENT FOR RIPRAP, HEAVY.

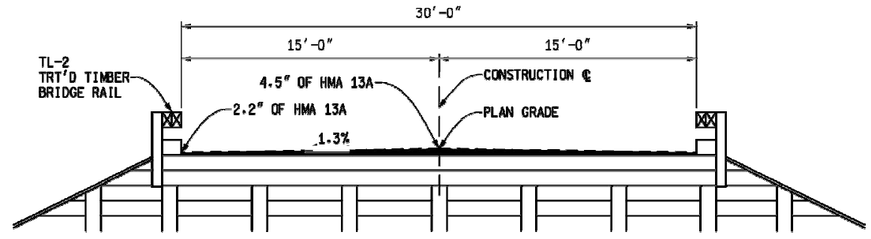

TYPICAL DECK SECTION

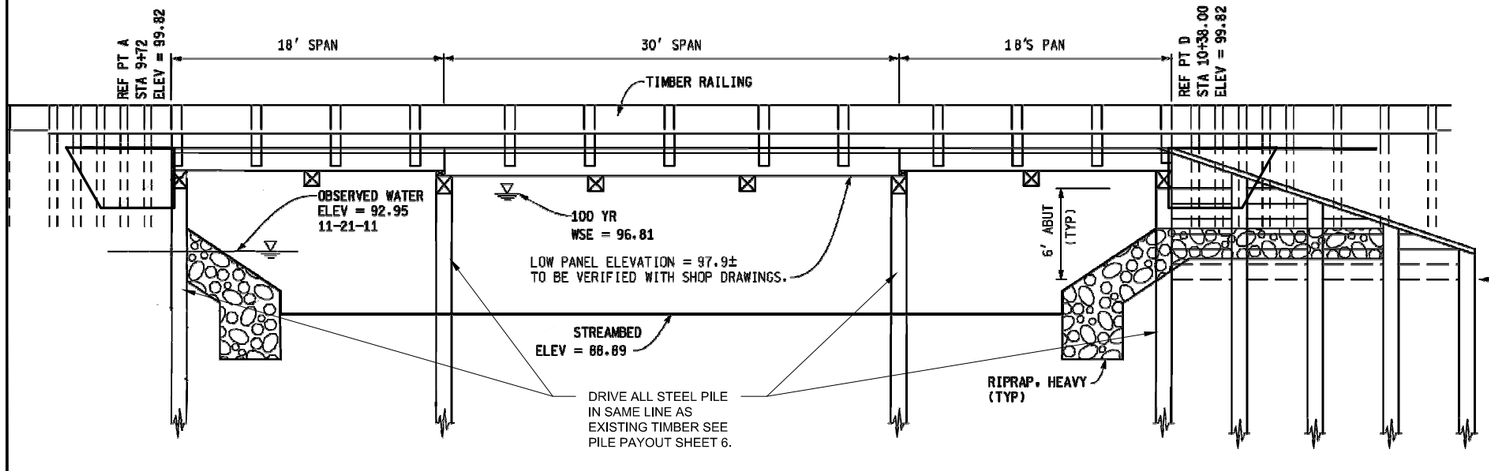

PROFILE ALONG CONSTRUCTION ℄

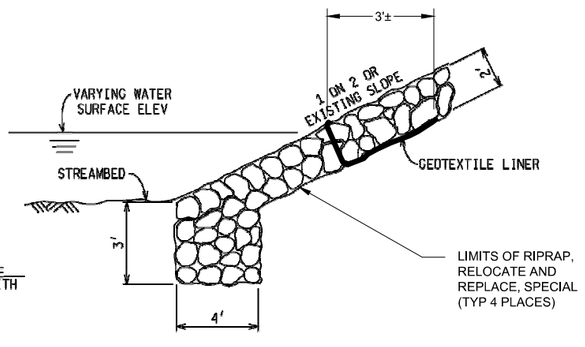

RIPRAP HEADER DETAIL

Flink ENGINEERING SERVICES
7450 SUPPLY RD
TRAVERSE CITY, MI
49696
P: 231.499.9479

NO.	REVISIONS	BY	DATE

EMMET COUNTY ROAD COMMISSION
BEAR CREEK TOWNSHIP, MICHIGAN
CLICK RD OVER BEAR RIVER
GENERAL PLAN OF STRUCTURE

I PROPOSED STEEL PILE

(I) TEST PILE

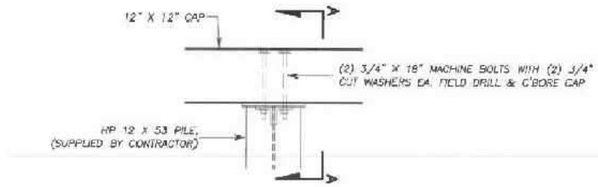

CAP CONNECTION DETAIL ⚠

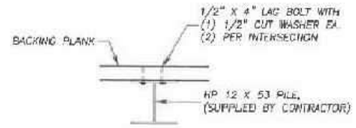

BACKING PLANK ATTACHMENT DETAIL ⚠

ABUTMENT CAP NOT SHOWN FOR CLARITY.

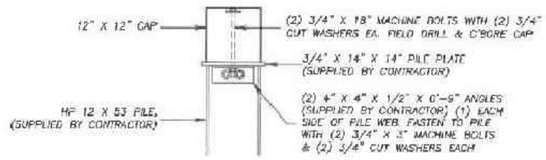

SECTION A–A

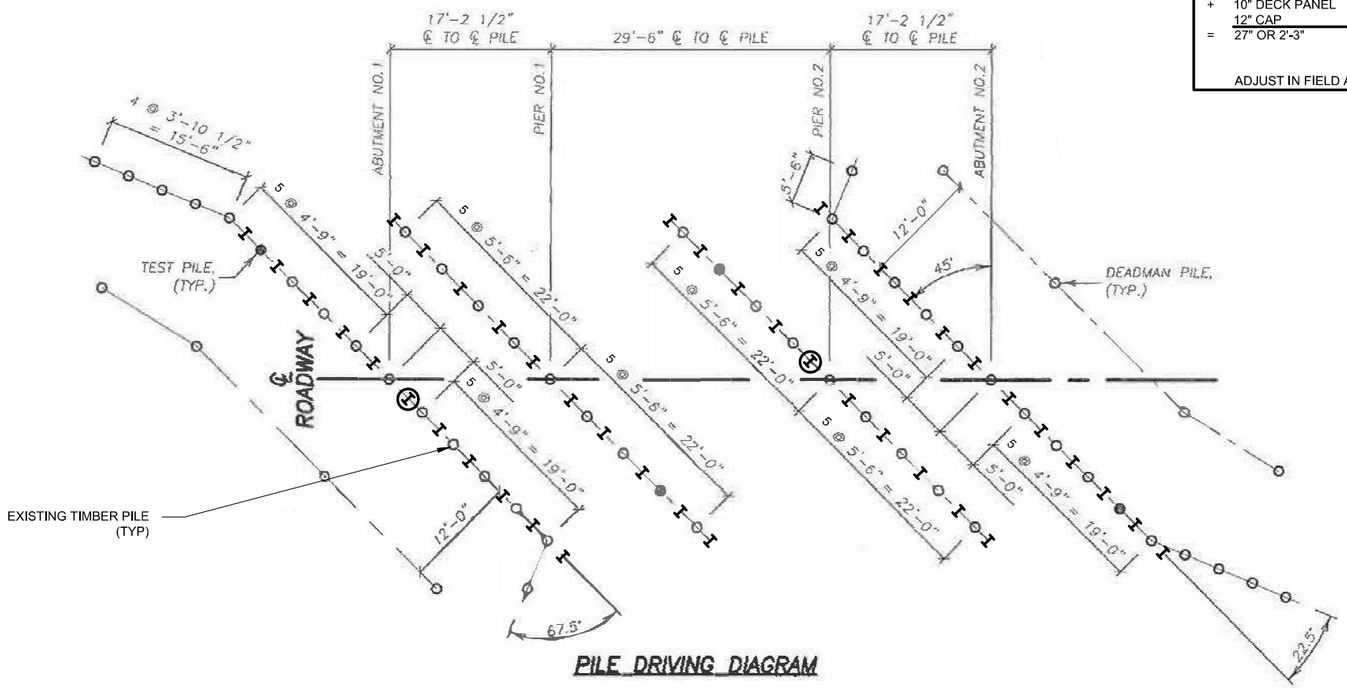

PILE DRIVING DIAGRAM

ABUTMENT PILE CUT-OFF CALCULATIONS	
	5" BITUMINOUS @ C/L
+	10" DECK PANEL
	12" CAP
=	27" OR 2'-3"

ADJUST IN FIELD AS NECESSARY

DRIVE HP 12X53 STEEL PILE IN THE SAME LINE AS EXISTING TIMBER PILE.

DRIVE ALL PILE TO AN NOMINAL PILE DRIVING RESISTANCE OF:

ABUTMENT	R/NDR = 80 KIPS/PILE
PIERS	R/NDR =170 KIPS/PILE

QUANTITIES (THIS SHEET)		
QUANTITY	UNIT	DESCRIPTION
1	LS	Pile Driving Equipment, Furn
2100	FT	Pile, Steel, Furn and Driven, 12 inch
2	EA	Test Pile, Steel, 12 inch
1	EA	Pile, Steel, Splice
2200	LB	Structural Steel, Plate, Erect
2200	LB	Structural Steel, Plate, Furn and Fab

Flink ENGINEERING SERVICES
7450 SUPPLY RD
TRAVERSE CITY, MI
49696
P: 231.499.9479

NO. | BY | DATE | REVISIONS

EMMET COUNTY ROAD COMMISSION
BEAR CREEK TOWNSHIP, MICHIGAN
CLICK RD OVER BEAR RIVER

PILE DETAILS

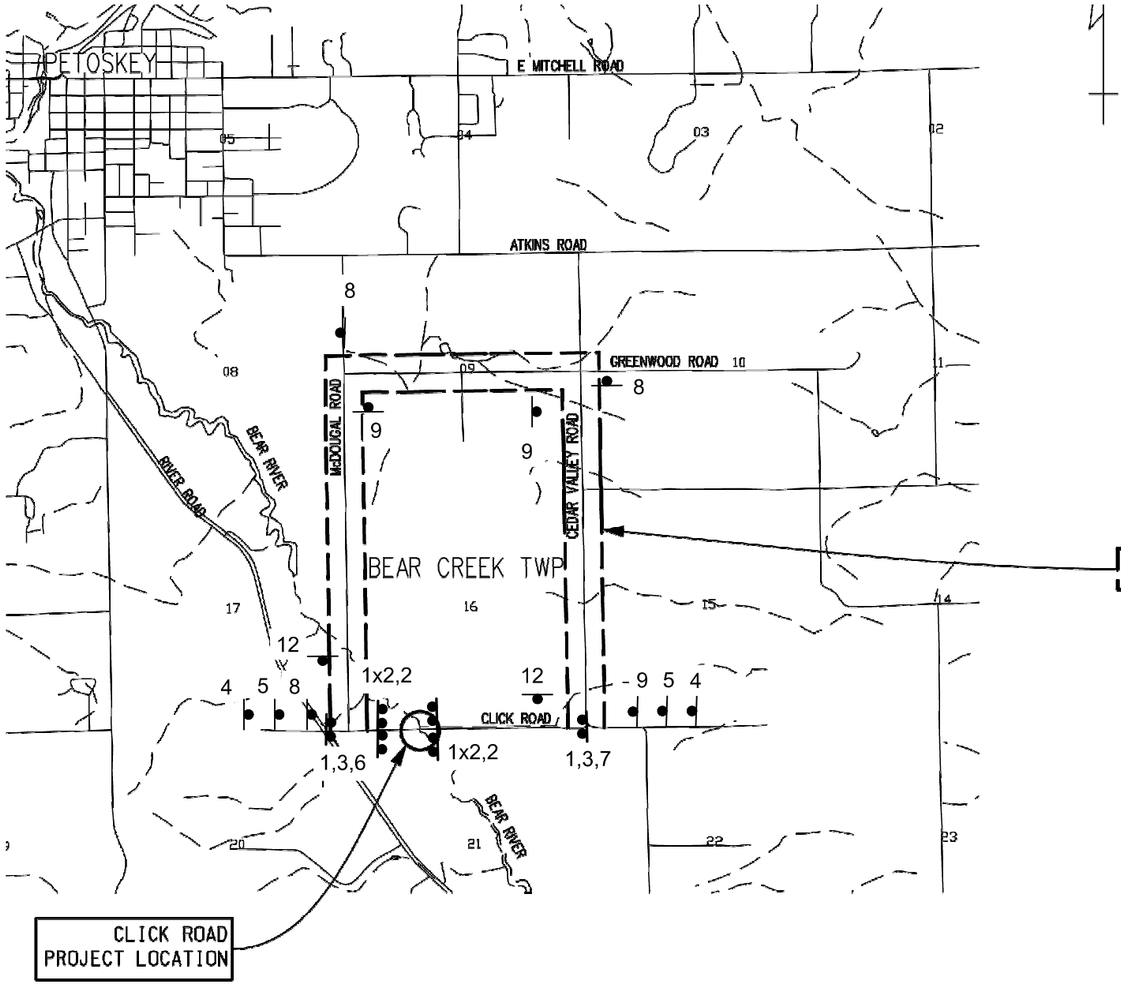

DETOUR ROUTE

1		BARRICADE, TYPE III, HIGH INTENSITY, LIGHTED, DOUBLE SIDED
2	ROAD CLOSED	R11-2 (48" X30") 10 SFT TYPE IIB SIGN MOUNT ON SEPARATE POSTS ABOVE AND BEHIND BARRICADE
3	ROAD CLOSED TO THRU TRAFFIC	R11-4 (60" X30") 12.5 SFT TYPE IIB SIGN MOUNT ON SEPARATE POSTS ABOVE AND BEHIND BARRICADE
4	ROAD CLOSED AHEAD	W20-3 (48"X48") 16 SFT TYPE IIIB SIGN
5	DETOUR AHEAD	W20-2 (48"X48") 16 SFT TYPE IIIB SIGN
6	DETOUR	M4-10L (48"X18") 6 SFT TYPE IIIB SIGN
7	DETOUR	M4-10R (48"X18") 6 SFT TYPE IIIB SIGN
8	DETOUR	M4-9L (30"X24") 5 SFT TYPE IIIB SIGN
9	DETOUR	M4-9R (30"X24") 5 SFT TYPE IIIB SIGN
10	DETOUR	M4-9 (30"X24") 5 SFT TYPE IIIB SIGN
11	CLICK RD	D3-1 (36"X12") 3 SFT TYPE IIIB SIGN
12	END DETOUR	M4-8a (24"X12") 2 SFT TYPE IIIB SIGN

TRAFFIC CONTROL QUANTITIES THIS PROJECT		
QUANTITY	UNIT	DESCRIPTION
1	LS	MINOR TRAF DEVICES
6	EA	BARRICADE, TYPE III, HIGH INTENSITY, DOUBLE SIDED, LIGHTED, FURN
6	EA	BARRICADE, TYPE III, HIGH INTENSITY, DOUBLE SIDED, LIGHTED, OPER
155	SFT	SIGN, TYPE B, TEMP, PRISMATIC, FURN
155	SFT	SIGN, TYPE B, TEMP, PRISMATIC, OPER

CONSTRUCTION SIGNING
(FOR INFORMATION ONLY)

SIGN	TYPE	SIZE	SIGN AREA (SFT)	NUMBER	TOTAL AREA (SFT)
1	TYPE III BARRICADE		NA	6	
2	R11-2	48"x30"	10.0	2	20.0
3	R11-4	60"x30"	12.5	2	25.0
4	W20-3	48"x48"	16.0	2	32.0
5	W20-2	48"x48"	16.0	2	32.0
6	M4-10L	48"x18"	6.0	1	6.0
7	M4-10R	48"x18"	6.0	1	6.0
8	M4-9L	30"x24"	5.0	3	15.0
9	M4-9R	30"x24"	5.0	3	15.0
10	M4-9	30"x24"	5.0	0	0.0
11	D3-1	36"x12"	3.0	0	0.0
12	M4-8a	24"x12"	2.0	2	4.0
				TOTAL:	155.0

LEGEND

SIGN

BARRICADE, TYPE III, HIGH INTENSITY, LIGHTED, DOUBLE SIDED

Flink ENGINEERING SERVICES
7450 SUPPLY RD
TRAVERSE CITY, MI
49696
P: 231.499.9479

NO.	REVISIONS	BY	DATE

EMMET COUNTY ROAD COMMISSION
BEAR CREEK TOWNSHIP, MICHIGAN
CLICK RD OVER BEAR RIVER

MAINTAINING TRAFFIC

EMMET COUNTY ROAD COMMISSION

IN COOPERATION WITH

THE TIP OF THE MITT

AND THE

LITTLE TRAVERSE BAY BANDS OF ODAWA INDIANS

PLANS OF PROPOSED IMPROVEMENTS

CLICK ROAD OVER THE BEAR RIVER BRIDGE REPLACEMENT PROJECT

EMMET COUNTY - BEAR CREEK TOWNSHIP

EXCEPT WHERE OTHERWISE INDICATED ON THESE PLANS, OR IN THE SPECIFICATIONS, ALL MATERIALS AND WORKMANSHIP SHALL BE ACCORDING TO THE MICHIGAN DEPARTMENT OF TRANSPORTATION 2012 STANDARD SPECIFICATIONS FOR CONSTRUCTION AND SUPPLEMENTAL SPECIFICATIONS, AS AMENDED.

THE DESIGN OF THIS STRUCTURE IS BASED ON CURRENT AASHTO LRFD BRIDGE DESIGN SPECIFICATION HL-93 *LOADING. LIVE LOAD PLUS DYNAMIC LOAD ALLOWANCE* DEFLECTION DOES NOT EXCEED 1/425 OF SPAN LENGTH.

THE PROPOSED IMPROVEMENTS *COVERED BY THESE PLANS ARE* IN ACCORDANCE WITH AASHTO: A POLICY ON GEOMETRIC DESIGN OF HIGHWAYS AND STREETS, 2004.

A DETOUR SHALL BE USED FOR CONSTRUCTION OF THIS PROJECT. PLACING OF TEMPORARY TRAFFIC CONTROL ITEMS SHALL BE DONE IN ACCORDANCE WITH THE 2011 EDITION OF THE MICHIGAN MANUAL OF UNIFORM TRAFFIC CONTROL DEVICES, AS REVISED.

THE DESIGN OF THE FOUNDATION PILING IS BASED ON MATERIAL OF THE FOLLOWING GRADES AND STRESSES:

WOOD PILES Fco = 900 psi

PLAN INDEX

SHEET NUMBER	SHEET DESCRIPTION
1	TITLE SHEET
2	GENERAL PLAN OF SITE
3	SOIL BORING SHEET
4	GENERAL PLAN OF STRUCTURE
5	TYPICAL SECTIONS/DETAIL SHEET
6	PILE DETAILS

TRAFFIC DATA

YEAR	2012	2032
A.D.T.	940	1397
% COMMERCIAL	5%	5%
DESIGN SPEED	55 MPH	

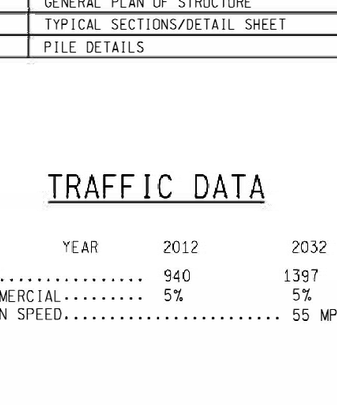

COUNTY KEY

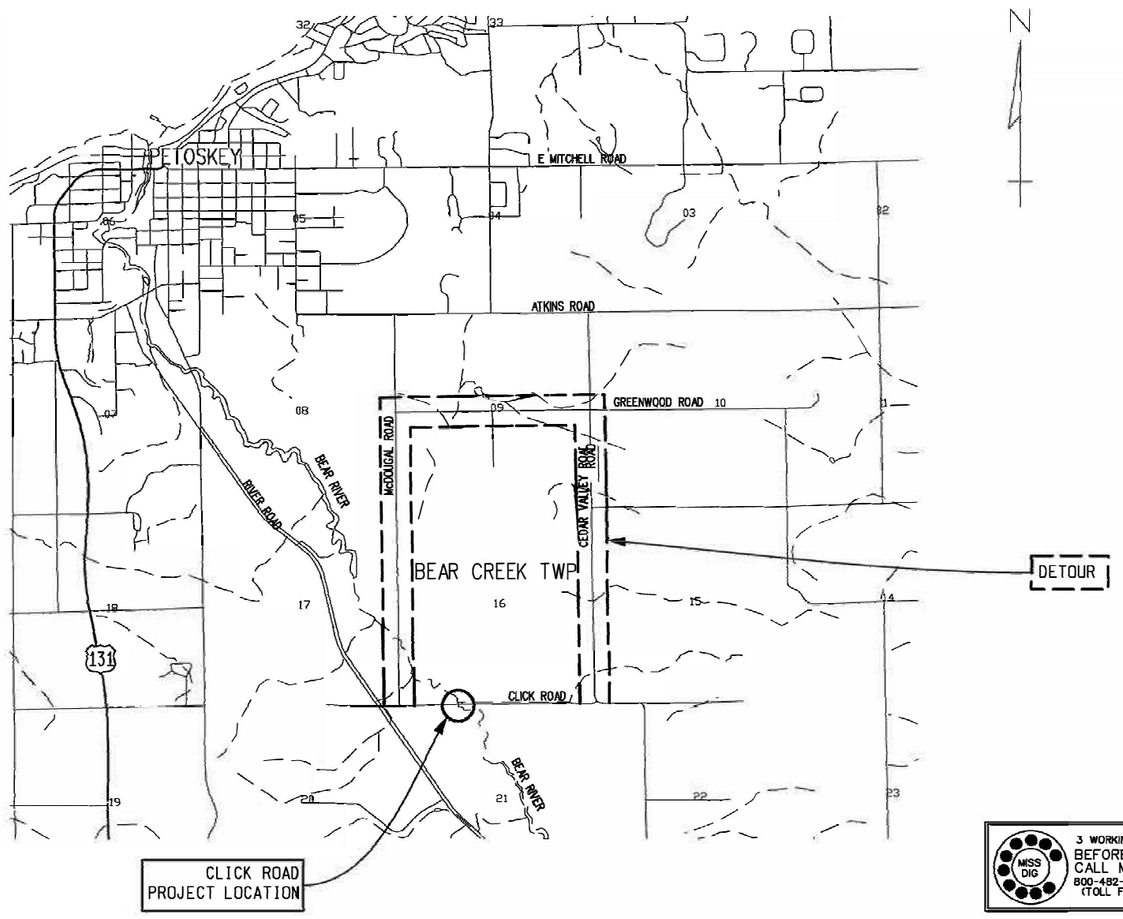

PLANS FOR: REMOVAL OF EXISTING CULVERTS, CONSTRUCTION OF THREE SPAN TIMBER BRIDGE INCLUDING STREAM RE-ALIGNMENT

EMMET COUNTY ROAD COMMISSION APPROVAL

BRIAN A. GUTOWSKI, P.E. — DATE

PREPARED UNDER SUPERVISION OF

PATRICK J. MIDDLETON, P.E. — REGISTERED PROFESSIONAL ENGINEER

45673 — REGISTRATION NUMBER

KPM ENGINEERING
CIVIL ENGINEERING CONSULTANTS

STATE OF MICHIGAN
PATRICK J. MIDDLETON
ENGINEER
No. 45673
PROFESSIONAL ENGINEER
2-17-12

MISS DIG
3 WORKING DAYS BEFORE YOU DIG
CALL MISS DIG
800-482-7171
(TOLL FREE)

DATE	SHEET NO.	TOTAL SHEETS
2/17/2012	1	6

12:47:55 PM
2/17/2012

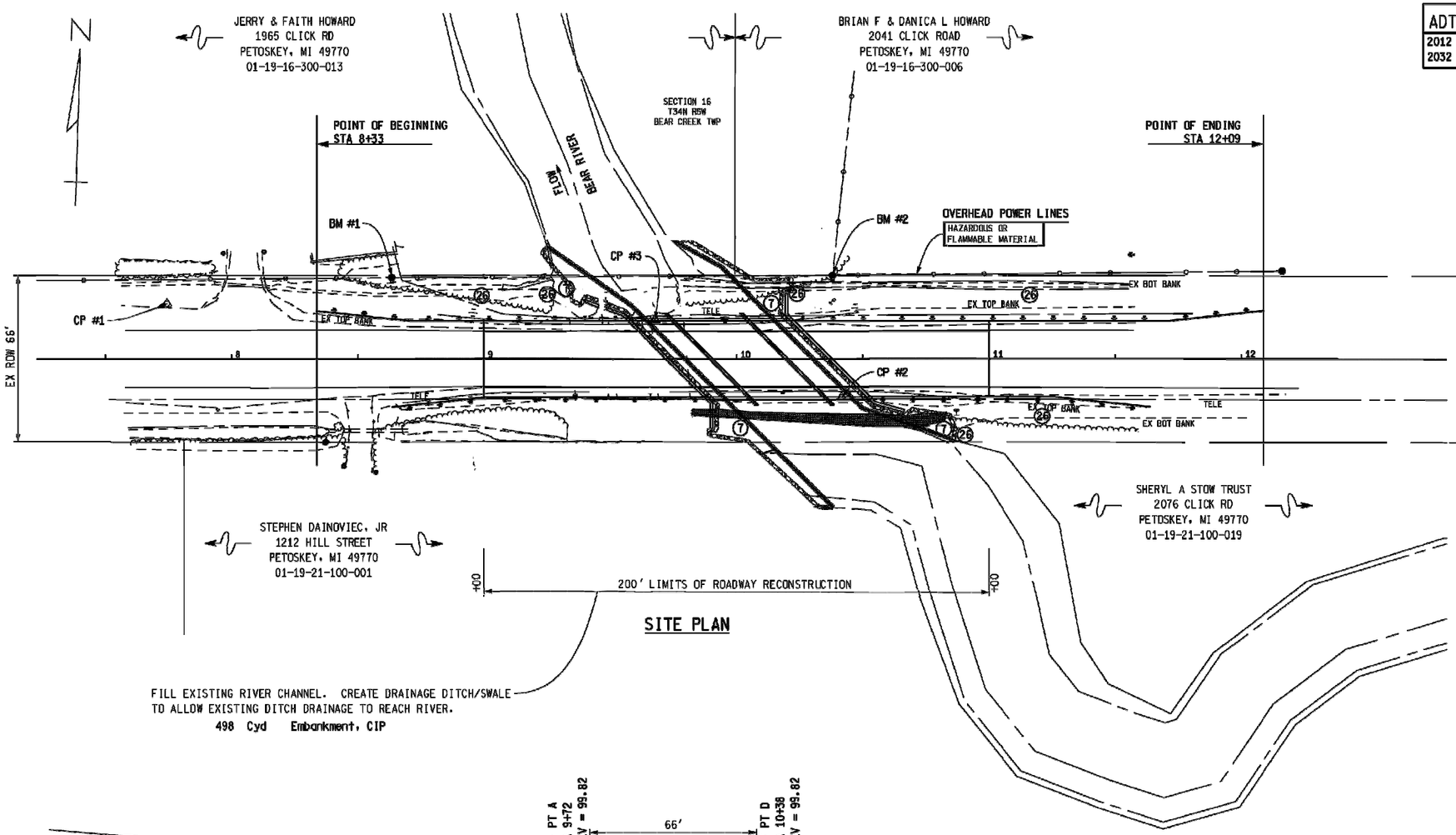

ADT
2012 = 940
2032 = 1397

EXISTING STRUCTURE
THREE 156" X 108" ARCH CMP CULVERTS

PROPOSED STRUCTURE
66' THREE SPAN X 30' WIDE TIMBER BRIDGE

BENCHMARKS
BM #1 SET SPIKE POWER POLE STA 8+63, 32' LT ELEV 98.34
BM #2 SET SPIKE POWER POLE STA 10+38, 32' LT ELEV 95.65

CONTROL POINTS
CP #1 -SET 1/2" REBAR APPROX STA 7+75, 22' LT N = 5000.00 E = 5000.00 Z = 100.00
CP #2 -SET 1/2" REBAR APPROX STA 10+42, 15' RT N = 4971.45 E = 5268.28 Z = 98.74
CP #3 -SET 1/2" REBAR APPROX STA 9+68, 16' LT N = 5000.00 E = 5193.43 Z = 99.25

SOIL EROSION AND SEDIMENTATION CONTROL ITEMS	
(7)	HEAVY RIPRAP W/GEDTEXTILE LINER
(18)	FILTER BAG
(26)	SILT FENCE
(34)	COFFERDAM

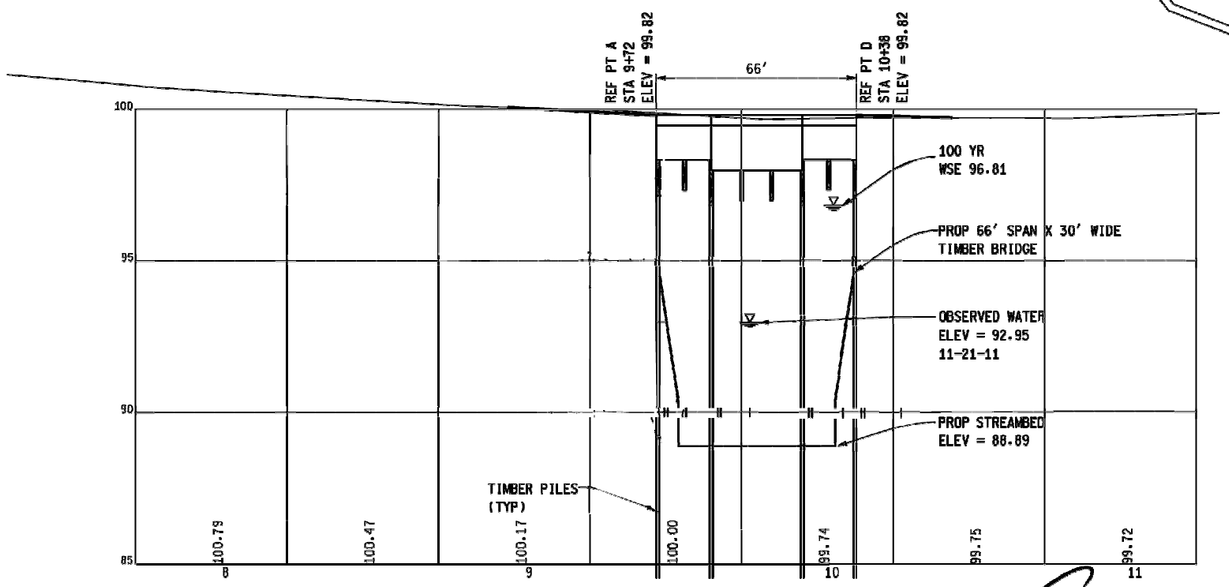

PROFILE AT CONSTRUCTION ℄

KPM ENGINEERING
CIVIL ENGINEERING CONSULTANTS

CONSTRUCTION QUANTITIES

1	LS	Mobilization, Max.
3	Ea	Culv, Rem, Over 48 inch
475	Ft	Erosion Control, Silt Fence
689	Syd	Aggregate Base, 6 inch
56	Ton	Shoulder, Cl II
121	Ton	HMA, 4E1
250	Ft	Guardrail, Type B
4	Ea	Guardrail Anch, Bridge, Det T3
4	Ea	Guardrail Approach Terminal, Type 1B
12	Ea	Guardrail Reflector
6	Ea	Barricade, Type III, High Intensity, Double Sided, Lighted Furn
6	Ea	Barricade, Type III, High Intensity, Double Sided, Lighted Oper
1	LS	Minor Traf Devices
10	Ea	Plastic Drum, High Intensity, Furn
10	Ea	Plastic Drum, High Intensity, Oper
300	Sft	Sign, Type B, Temp, Prismatic, Furn
300	Sft	Sign, Type B, Temp, Prismatic, Oper
159	Syd	Riprap, Heavy
644	Syd	Slope Restoration

THE WORK COVERED BY THESE PLANS INCLUDES REMOVAL OF THE EXISTING CULVERTS, MAINTAINING TRAFFIC, CONSTRUCTION OF THE PROPOSED BRIDGE AND APPROACHES, SLOPE RESTORATION, RIPRAP SCOUR PROTECTION AND HMA PAVING.

MEASURES SHALL BE TAKEN TO PREVENT DEBRIS FROM FALLING FROM THE STRUCTURE. IF DEBRIS FALLS INTO THE WATERWAY, IT SHALL BE REMOVED WITHIN 24 HOURS. SINCE DISTURBANCE OF THE WATERWAY BOTTOM MAY BE AS HARMFUL AS THE DEBRIS ITSELF, THE PREVENTIVE MEASURES MUST BE EFFECTIVE.

WATER LEVEL IS SUBJECT TO CHANGE. THE ECRC IS RESPONSIBLE FOR MAKING A DETERMINATION OF WATER LEVELS THAT MAY EXIST DURING CONSTRUCTION.

IMMEDIATELY AFTER CONSTRUCTION OF AN ABUTMENT IS COMPLETED, SLOPE PROTECTION AND SEEDING OR SODDING SHALL BE PLACED ON THE ADJACENT SLOPES.

FOR PROTECTION OF UNDERGROUND UTILITIES AND IN CONFORMANCE WITH PUBLIC ACT 53, 1974, THE ECRC SHALL DIAL 1-800-482-7171 A MINIMUM OF THREE FULL WORKING DAYS, EXCLUDING SATURDAYS, SUNDAYS, AND HOLIDAYS PRIOR TO BEGINNING EACH EXCAVATION IN AREAS WHERE PUBLIC UTILITIES HAVE NOT BEEN PREVIOUSLY LOCATED. MEMBERS WILL THUS BE ROUTINELY NOTIFIED. THIS DOES NOT RELIEVE THE ECRC OF THE RESPONSIBILITY OF NOTIFYING UTILITY OWNERS WHO MAY NOT BE A PART OF THE "MISS DIG" ALERT SYSTEM.

APPROPRIATE SOIL EROSION AND SEDIMENTATION CONTROL MEASURES SHALL BE IN PLACE PRIOR TO EARTH-DISTURBING ACTIVITIES. PLACE TURF ESTABLISHMENT ITEMS AS SOON AS POSSIBLE ON POTENTIAL ERODIBLE SLOPES AS DIRECTED BY THE ENGINEER. CRITICAL DITCH GRADES SHALL BE PROTECTED WITH EITHER SOD OR SEED/MULCH OR MULCH BLANKET AS DIRECTED BY THE ENGINEER.

PLAN ELEVATIONS AND COORDINATES ARE BASED ON A LOCAL DATUM.

EMMET
County Road Commission

3 WORKING DAYS BEFORE YOU DIG CALL MISS DIG 800-482-7171 (TOLL FREE)

GENERAL PLAN OF SITE

DATE		SHEET	OF
2/17/2012	CLICK ROAD OVER THE BEAR RIVER	2	6

12:48:01 PM 2/17/2012

TEST HOLE SB-1

LOCATION: EAST SIDE OF EXISTING CULVERTS, NORTH SIDE OF ROAD
SECTION 16 BEAR CREEK TWP
EMMET COUNTY

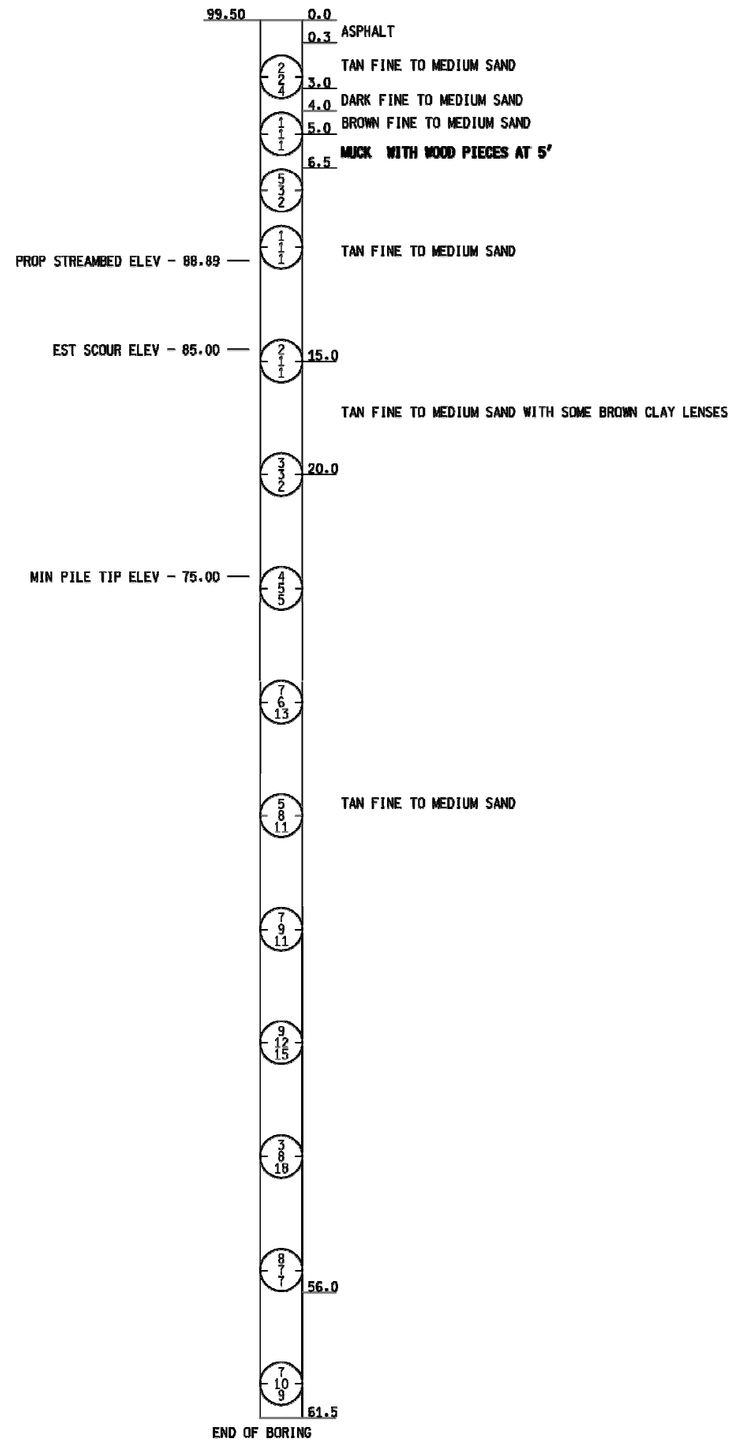

END OF BORING
BORING DATE:12-22-2011
WATER LEVEL DURING DRILLING = 2.0'
BORING PERFORMED BY PEARSON DRILLING COMPANY

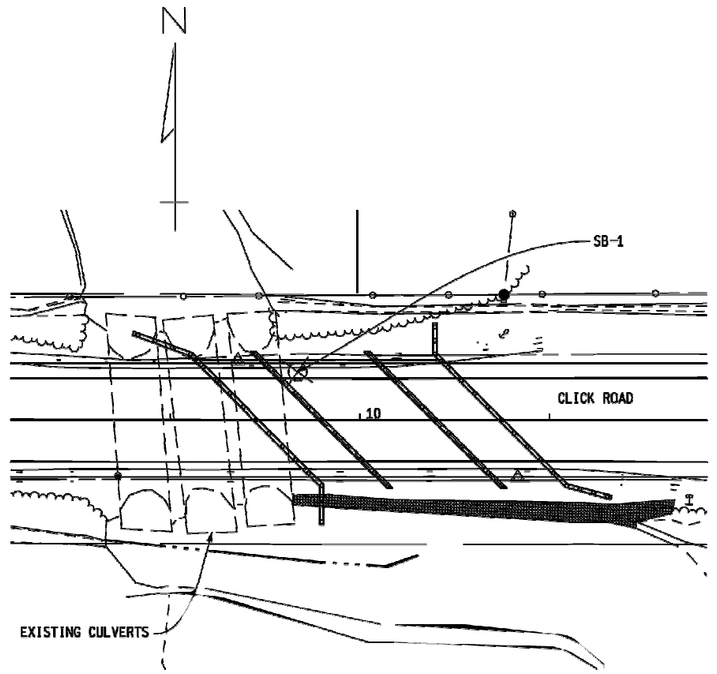

BORING LOCATION PLAN

NOTES:

BLOW COUNT NUMBERS DENOTE NUMBER OF BLOWS REQUIRED TO DRIVE A 2" O.D. (1 1/2" I.D.)SPLIT SPOON SAMPLER 3 SUCCESSIVE 6" INCREMENTS USING A 140# HAMMER FALLING 30".

CONSISTENCY WAS DETERMINED BY INSPECTION OF SAMPLES AND SUBSTANTIATED BY SOILS RESISTANCE TO DRILLING TOOLS.

THE SOIL BORING LOGS REPRESENT POINT INFORMATION. PRESENTATION OF THIS INFORMATION IN NO WAY IMPLIES THAT SUBSURFACE CONDITIONS ARE THE SAME AT LOCATIONS OTHER THAN THE EXACT LOCATION OF THE BORING.

KPM ENGINEERING
CIVIL ENGINEERING CONSULTANTS

EMMET
County Road Commission

3 WORKING DAYS BEFORE YOU DIG CALL MISS DIG
800-482-7171 (TOLL FREE)

SOIL BORING SHEET

DATE		SHEET	OF
2/17/2012	CLICK ROAD OVER THE BEAR RIVER	3	6

2/17/2012 12:48:04 PM

CONSTRUCTION QUANTITIES

1226	Cyd	Excavation, Channel
523	Cyd	Backfill, Structure, CIP
271	Cyd	Excavation, Fdn
2	Ea	Erosion Control, Filter Bag
1980	Sft	Structure, Timber - Install

THE EXCAVATION, CHANNEL PAY ITEM APPLIES TO AREAS BETWEEN THE PROPOSED ABUTMENTS.

THE EXCAVATION, FDN PAY ITEM APPLIES TO AREAS BEHIND THE ABUTMENTS. QUANTITIES FOR THIS ITEM ARE BASED ON EXCAVATING TO 1 FOOT BELOW THE BOTTOM OF ABUTMENTS AND UP TO EXISTING GRADE AT A 1:1 SLOPE.

THE STRUCTURE BACKFILL ITEM INCLUDES 300 CYD FOR FILLING EXISTING CULVERT REMOVAL AREAS.

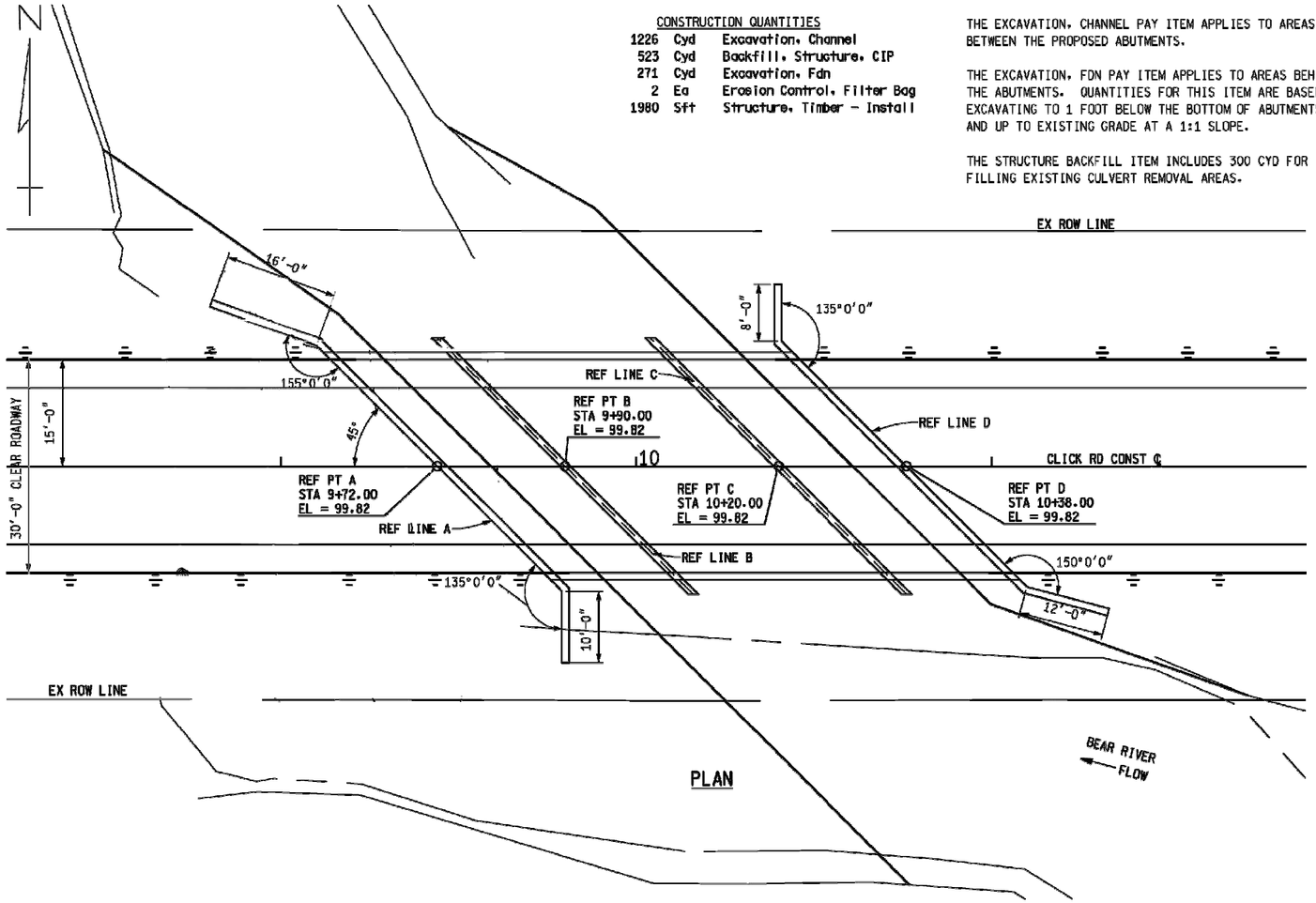

PLAN

SUMMARY OF HYDRAULIC ANALYSIS

	EXISTING			PROPOSED			
FLOOD DATA	DIS-CHARGE (CFS)	WATER SURFACE ELEV. AT U/S FACE OF STRUCTURE	VELOCITY IN D/S CHANNEL (FPS)	WATER SURFACE ELEV. AT U/S FACE OF STRUCTURE	VELOCITY IN D/S CHANNEL (FPS)	WATERWAY AREA PROVIDED (SFT)	CHANGE IN WS EL 250' U/S OF PROPOSED STRUCTURE
2 YEAR	470	94.6	1.89	94.53	1.64	287.98	-0.05
50 YEAR	950	96.53	2.83	96.35	2.36	405.82	-0.18
100 YEAR	1100	97.06	3.08	96.81	2.55	435.62	-0.26

THE CONTRIBUTING DRAINAGE AREA TO THIS CROSSING IS 107 SQUARE MILES.
THE MAXIMUM BRIGE AREA BELOW LOW CHORD IS 561 SQUARE FEET.

THE WATER SURFACE AND/OR ENERGY GRADE ELEVATIONS SHOWN ON THIS HYDRAULIC TABLE ARE TO BE USED FOR COMPARISON PURPOSES ONLY AND ARE NOT TO BE USED FOR ESTABLISHING A REGULATORY FLOODPLAIN.

THE DESIGN OF THIS STRUCTURE IS BASED ON CURRENT AASHTO LRFD BRIDGE DESIGN SPECIFICATION HL-93 LOADING. LIVE LOAD PLUS DYNAMIC LOAD ALLOWANCE DEFLECTION DOES NOT EXCEED 1/425 OF SPAN LENGTH.

THE ECRC SHALL SUBMIT A CONSTRUCTION PLAN FOR DEWATERING AND MAINTAINING STREAM FLOW DURING CULVERT CONSTRUCTION TO THE ENGINEER. THE PLAN MUST BE APPROVED BY THE ENGINEER PRIOR TO PERFORMING ANY CULVERT RELATED WORK.

WITHOUT THE PREVENTATIVE MEASURES SHOWN ON THESE PLANS, THERE IS A POSSIBILITY THAT STREAM BED SCOUR MAY OCCUR. THE ESTIMATED TOTAL SCOUR DEPTH IS CALCULATED TO BE 4.7 FEET AT PIERS. THESE DEPTHS ARE BASED ON A 500 YEAR RUN OFF EVENT.

GEOTEXTILE LINER SHALL BE PLACED ON ALL SLOPES PRIOR TO PLACING RIPRAP. PAYMENT FOR GEOTEXTILE LINER SHALL BE INCLUDED IN PAYMENT FOR RIPRAP, HEAVY.

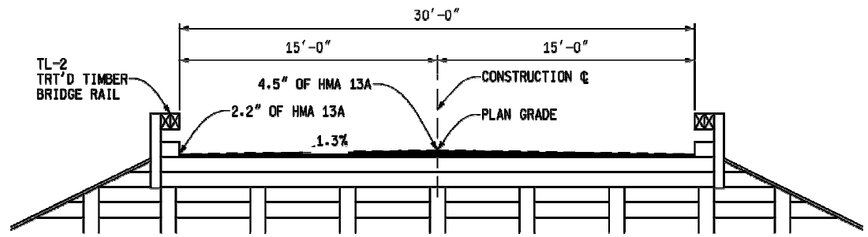

TYPICAL DECK SECTION

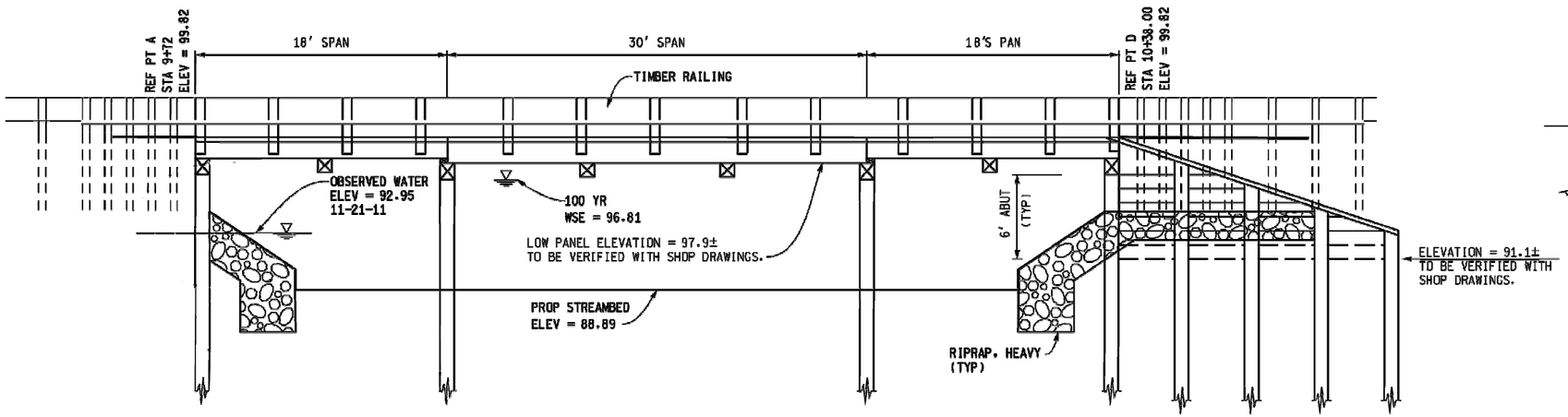

PROFILE ALONG CONSTRUCTION ℄

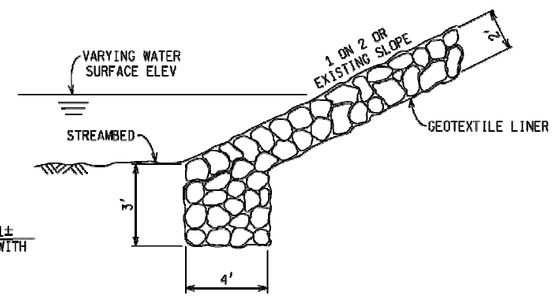

RIPRAP HEADER DETAIL

KPM ENGINEERING
CIVIL ENGINEERING CONSULTANTS

EMMET
County Road Commission

3 WORKING DAYS BEFORE YOU DIG CALL MISS DIG 800-482-7171 (TOLL FREE)

GENERAL PLAN OF STRUCTURE

DATE		SHEET	OF
2/17/2012	CLICK ROAD OVER THE BEAR RIVER	4	6

124606 PM
2/17/2012

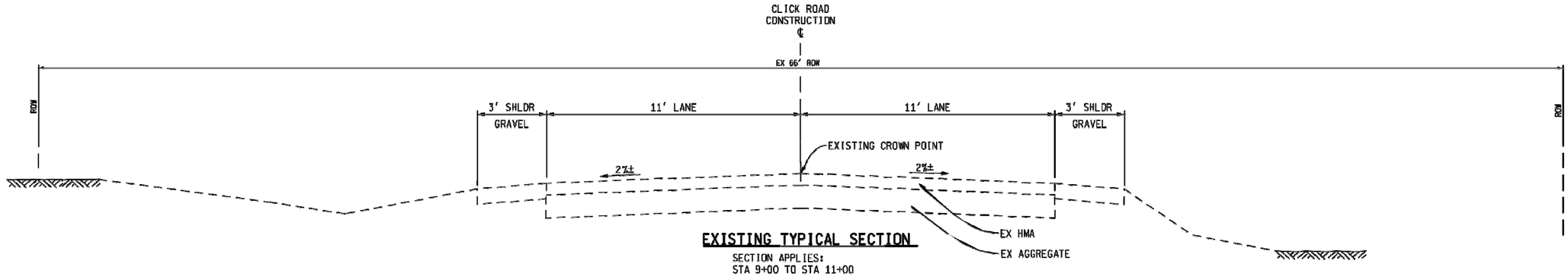

EXISTING TYPICAL SECTION

SECTION APPLIES:
STA 9+00 TO STA 11+00

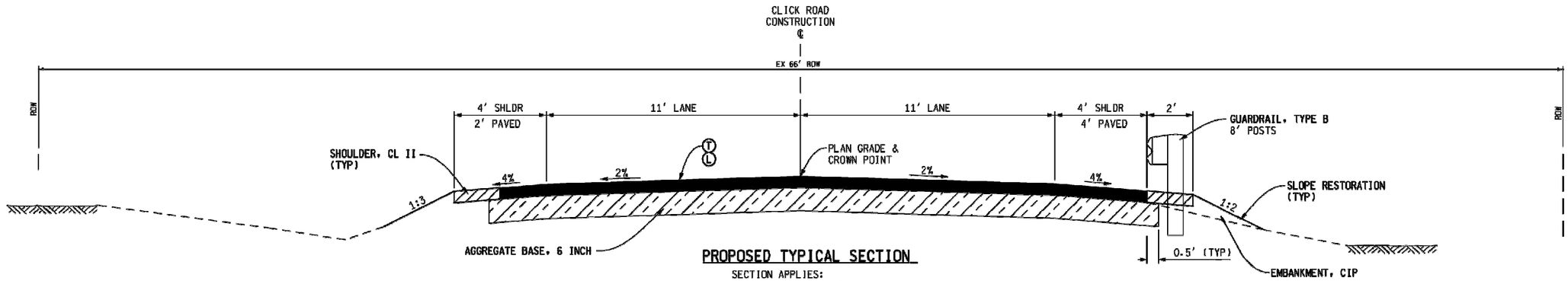

PROPOSED TYPICAL SECTION

SECTION APPLIES:
STA 9+00 TO STA 9+72
STA 10+38 TO STA 11+00

HMA APPLICATION ESTIMATE

IDENT NO.	ITEM	RATE PER SYD	PERFORMANCE GRADE	REMARKS
Ⓣ	HMA, 4E1	165#	PG 58-28	TOP COURSE, AWI = 220
Ⓛ	HMA, 4E1	165#	PG 58-28	LEVELING COURSE
	* BOND COAT	0.05-0.15 GAL/SYD		

* FOR INFORMATION ONLY

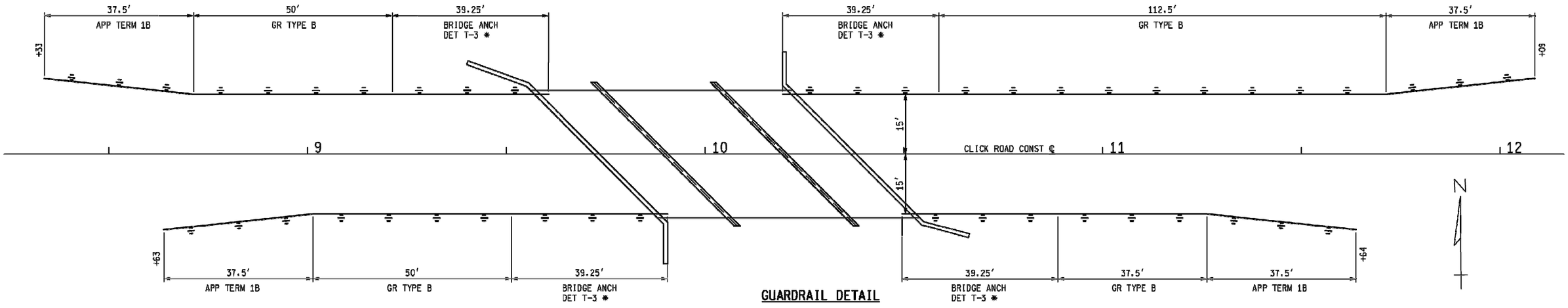

GUARDRAIL DETAIL

* HEIGHT OF GUARDRAIL BRIDGE ANCHORAGES SHALL BE ADJUSTED SUCH THAT THE SPECIAL END SHOE IS CENTERED ON THE TIMBER BRIDGE RAILING.

KPM ENGINEERING
CIVIL ENGINEERING CONSULTANTS

EMMET
County Road Commission

3 WORKING DAYS
BEFORE YOU DIG
CALL MISS DIG
800-482-7171
(TOLL FREE)

TYPICAL SECTIONS/DETAIL SHEET

DATE		SHEET	OF
2/17/2012	CLICK ROAD OVER THE BEAR RIVER	5	6

12:48:09 PM
2/17/2012

TREATED TIMBER PILES				
LOCATION	PILE TYPE	NUMBER OF PILES	ESTIMATED LENGTH FURNISHED	
			EACH (FT)	TOTAL (FT)
	TEST	1	50	50
ABUT A	VERTICAL	10	40	400
PIER 1	VERTICAL	11	40	440
PIER 2	TEST	1	50	50
	VERTICAL	10	40	400
ABUT B	VERTICAL	11	40	440
ABUT A WINGWALLS		5	30	150
ABUT B WINGWALLS		5	30	150
TOTAL		54		2080

CONSTRUCTION QUANTITIES THIS SHEET

2080 Ft	Pile, Treated Timber, Driven
1 LS	Pile Driving Equipment, Furn
2 Ea	Test Pile, Treated Timber

N

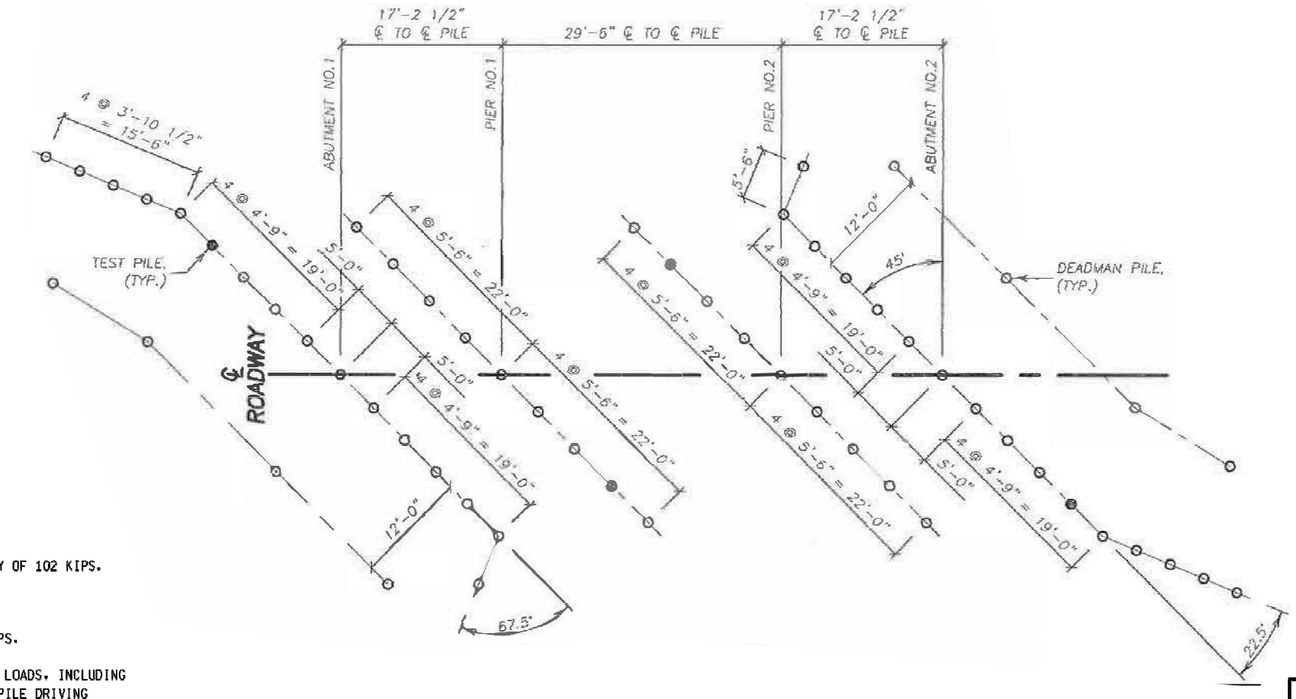

ALL PILES SHALL BE DRIVEN TO AN ULTIMATE PILE CAPACITY OF 102 KIPS.

THE ESTIMATED DOWNDRAG AFTER PILE DRIVING IS 0 KIPS.

THE ESTIMATED PILE CAPACITY LOST DUE TO SCOUR IS 2 KIPS.

THE ALLOWABLE PILE RESISTANCE AVAILABLE TO RESIST ALL LOADS, INCLUDING THE DOWNDRAG, IS EQUAL TO 33 PERCENT OF THE ULTIMATE PILE DRIVING RESISTANCE THAT IS REDUCED BY THE LOSS DUE TO SCOUR.

KPM ENGINEERING
CIVIL ENGINEERING CONSULTANTS

EMMET
County Road Commission

3 WORKING DAYS BEFORE YOU DIG CALL MISS DIG 800-482-7171 (TOLL FREE)

PILE DETAILS

DATE		SHEET	OF
2/17/2012	CLICK ROAD OVER THE BEAR RIVER	6	6

12:49:11 PM 2/17/2012

SPECIFICATIONS:

GRADING

ALL DOUGLAS FIR-LARCH TO BE GRADED PER WCLIB STANDARD GRADING RULES.

MATERIALS & TREATMENT

TIMBER PRESERVATIVE TREATMENT SHALL BE IN ACCORDANCE WITH CURRENT STATE AND/OR AASHTO SPECIFICATIONS. ALL TIMBER SHALL BE COPPER NAPHTHENATE TREATED UNLESS NOTED OTHERWISE.

ALL PILING IS TO BE IN ACCORDANCE WITH CURRENT STATE SPECIFICATIONS.

SPAN 1 & 3 DECK TO BE 10" DOUGLAS FIR-LARCH, NO.2. S1S.

SPAN 2 DECK TO BE 14" DOUGLAS FIR-LARCH, NO.1. S1S.

BRIDGE RAILPOST TO BE DOUGLAS FIR-LARCH, DENSE SELECT STRUCTURAL.

GLU-LAM RAIL TO BE DOUGLAS FIR, COMB. SYMBOL 24F-V8, DF/DF.

ABUTMENT & PIER CAPS TO BE DOUGLAS FIR-LARCH, NO.1.

CURBS & SCUPPERS TO BE DOUGLAS FIR - LARCH, NO.1.

BALANCE OF TIMBER TO BE DOUGLAS FIR - LARCH, IN ACCORDANCE WITH DESIGN REQUIREMENTS.

ALL TIMBER IS ROUGH UNLESS OTHERWISE NOTED.

MISCELLANEOUS

ALL TIMBER TO BE CUT TO EXACT LENGTH, DRESSED TO SIZE REQUIRED AND ALL PRACTICAL FRAMING TO BE DONE PRIOR TO TREATMENT.

ALL DECK PLANKS SHALL BE PREDRILLED PRIOR TO TREATMENT.

ALL PLANK FOR DECK PANELS SHALL BE PRECISION END TRIMMED TO LENGTH WITH 1/4" UNDERLENGTH & NO OVERLENGTH TOLERANCE PERMITTED.

DECK PANELS SHALL BE ASSEMBLED WITH 3/8" DIAMETER RING SHANK DOWELS. ALL DOWELS ARE TO BE SIMULTANEOUSLY DRIVEN WITH EQUAL FORCE USING A MECHANICAL PRESS THE FULL LENGTH OF THE DECK, ENSURING ALL HEADS ARE FLUSH WITH THE SURFACE OF THE TIMBER PLANK. MULTIPLE IMPACT TOOLS ARE NOT TO BE USED TO SET DOWELS BECAUSE OF POTENTIAL FOR WOOD FIBER RUPTURE.

DECK PANELS WILL BE DELIVERED TO JOBSITE AFTER BEING FULLY ASSEMBLED AT FABRICATION PLANT.

ALL HARDWARE TO MEET ASTM A307-97 GALVANIZED TO A153. ALL HIGH STRENGTH HARDWARE TO MEET ASTM A325 OR A449 GALVANIZED TO A153. ALL STRUCTURAL STEEL TO MEET ASTM A36, GALVANIZED TO A123. 3/4" GALVANIZED CABLE TO BE ASTM A741-98.

CONSTRUCTION NOTES:

TIMBER DECK PANELS ARE MARKED IN THE SHOP FOR USE IN FIELD PLACEMENT OF THE PANELS ON THE CAPS, e.g. A1, B1, C1 FOR SPAN 1, A2, B2, C2 FOR SPAN 2.

DOWEL LAMINATED DECK: PANEL "A" IS PLACED FIRST IN ITS FINAL POSITION ON THE CAPS. NEXT DRILL THE 11/16" DIA. HOLES THRU PANEL INTO CAP IN EACH END OF PANEL AT THE LOCATIONS SHOWN AND FASTEN THE 3/4" DIA. DM. HD. DR. SPKS. NEXT PLACE PANEL "C" SO THAT ITS UPPER SPLICE BLOCK IS DIRECTLY OVER THE LOWER SPLICE BLOCK ON PANEL "A" AND DRAW TIGHT TOGETHER. THEN DRILL THE 9/16" DIA. HOLES THRU LOWER SPLICE BLOCK AND DRIVE THE 5/8" DM. HD. DR. SPIKES IN LOCATIONS SHOWN. THEN DRILL HOLES THRU PANEL INTO CAP AND FASTEN THE 3/4" DM. HD. DR. SPKS. THEREAFTER, SUCCESSIVELY PLACE PANELS "C" & "B" IN THE SAME MANNER, ENSURING ALL PANELS ARE DRAWN TIGHT TOGETHER BEFORE ANY FASTENING OCCURS.

STEEL BANDING ON PANELS IS TO BE REMOVED AFTER PANELS HAVE BEEN PLACED IN THEIR FINAL POSITION ON THE CAPS.

INSTALLATION NOTES:

HIGH-STRENGTH (A449) DOME HEAD BOLTS (3/4" X 24") & (3/4" X 28") DO NOT HAVE FINS UNDER THE HEAD AT THE SHANK, AND ARE TO BE USED AT THE CURB TO DECK LOCATION.

ALL HOLES DRILLED IN FIELD WHERE SPIKES ARE USED ARE TO BE 1/16" SMALLER THAN SPIKE SIZE.

ALL HOLES DRILLED FOR BOLTS ARE TO BE 1/16" LARGER THAN BOLT SIZE.

HOLES DRILLED FOR 3/4" LAG BOLTS ARE TO BE 9/16" IN DIAMETER FOR THE THREADED PORTION OF THE BOLT AND 13/16" FOR THE SHANK.

ANY NUT OR MACHINE BOLT HEAD IN DIRECT CONTACT WITH TIMBER TO HAVE ONE PLATE WASHER BETWEEN NUT & TIMBER, OR BOLT HEAD & TIMBER.

ANY NUT OR MACHINE BOLT HEAD IN DIRECT CONTACT WITH STEEL TO HAVE ONE CUT WASHER BETWEEN NUT & STEEL, OR BOLT HEAD & STEEL.

SET THREADS ON ALL BOLTS AT NUT WITH A CENTER PUNCH AFTER TIGHTENING.

ABUTMENTS TO BE BACKFILLED WITH A CLEAN GRANULAR FILL.

ALL TIMBER CUT OR DRILLED IN THE FIELD SHALL BE TREATED WITH AN APPROVED PRESERVATIVE.

CONSTRUCTION REQUIREMENTS SHALL CONFORM TO STATE SPECIFICATIONS.

EMMET COUNTY, MICHIGAN
CLICK ROAD BRIDGE
TRIPLE SPAN PANEL-LAM BRIDGE

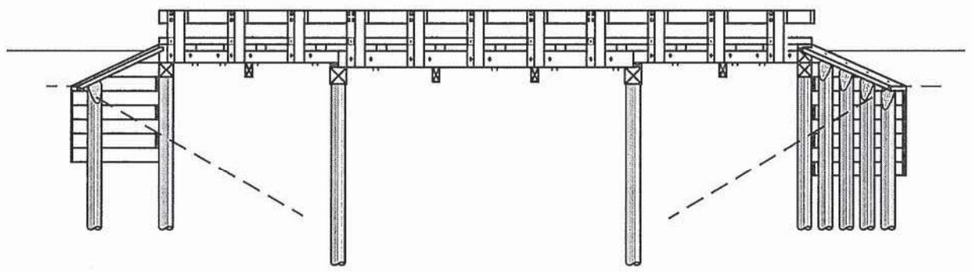

BRIDGE ELEVATION

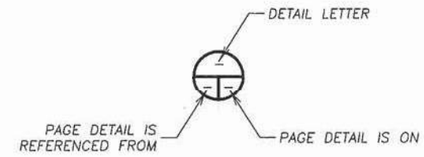

CALLOUT LEGEND

DO NOT SCALE DRAWINGS

Shop Drawing Review

Engineers Review	Required Response
X Approved	X Confirm
__ Note Marking	__ Revise
__ Rejected	__ Resubmit

Requires review and approval by other (_____)

Engineer's review is for general conformance with the design concept of the project and the information given in the contract documents. The contractor is solely responsible for, and this review does not include, confirming and correlating all quantities and dimensions; selecting fabrication processes and techniques of construction; coordinating the work with the other trades and performing all work in a safe and satisfactory manner. Corrections or comments made on this submittal during this review do no relieve the contractor from compliance with the requirements of the contract documents or with its responsibilities listed above.

KPM Engineering

By:_____ Date: 4-20-12

ENGINEER'S SIGNATURE AND SEAL ARE TO ASSUME DESIGN RESPONSIBILITY FOR THE TIMBER BRIDGE AS SUPPLIED & DRAWN BY WHEELER LUMBER, LLC. INDEPENDENT OF ITS FINAL POSITION. THIS DESIGN RESPONSIBILITY IS LIMITED TO THE TIMBER BRIDGE AND DOES NOT INCLUDE ANY DESIGN RESPONSIBILITY PERTAINING TO, BUT NOT LIMITED TO, ROADWAY GEOMETRICS, BRIDGE POSITIONING, HYDRAULIC DESIGN, SCOUR ANALYSIS, PERMITTING PROCEDURES, ERECTION, UTILITY FACILITIES, SOIL CONDITIONS, SUBSURFACE PILE DESIGN (INCLUDING PILE LENGTHS), ETC.

PLAN SHEET INDEX

SHEET	DESCRIPTION
1	COVER SHEET & SPECIFICATIONS
2	GENERAL BRIDGE PLAN
3	GENERAL BRIDGE ELEVATION/PILE DRIVING DIAGRAM
4	ABUTMENT PLAN & ELEVATION/SECTION/DETAIL
5	PIER PLAN & ELEVATION/DETAIL
6	SECTIONS & DETAILS
7	RAILPOST SECTIONS

BRIDGE SPAN RATINGS

BRIDGE IS DESIGNED TO AASHTO HL-93 LOADING

RATINGS BASED ON FLEXURE

LOAD	US TONS	METRIC TONS
INVENTORY	36.3	32
OPERATING	47.0	42

MICHIGAN OPERATING	166 US TONS
MICHIGAN OVERLOAD	CLASS A

REVISION	DESCRIPTION	DATE	INITIALS
1			
2			
3			

COVER SHEET & SPECIFICATIONS

18'/30'/18' (66' TOTAL) TREATED TIMBER SPANS
30'-0" CLEAR ROADWAY
CLICK ROAD BRIDGE
EMMET COUNTY, MICHIGAN
TL-2 RAIL SYSTEM/45° R.H.F. SKEW

Wheeler Lumber, LLC
9330 JAMES AVE. S.
BLOOMINGTON, MN 55431

DATE: 4/10/12		TRACKING NO. T16076	SHEET NO.
DWN: LAF	CHK: WEH	ORDER NO. 612-13244	1 OF 7

NOTES:

PANEL WIDTHS SHOWN ARE APPROXIMATE. DIMENSIONS GIVEN ARE TO ℄ OF SHIPLAP JOINTS.

RAILING NOT SHOWN ON PLAN VIEW FOR CLARITY.

CONTRACTOR SHOULD BE AWARE OF THE POTENTIAL TO HIT THE R.S. NAILS IN THE PREFABRICATED DECK PANELS WHEN INSTALLING THE CURB BOLTS FOR THE CURB & SCUPPER ATTACHMENT. A 3/4" HOLE SAW IS RECOMMENDED IN DRILLING THROUGH THE R.S. NAILS FOR THIS ATTACHMENT.

⊠ DENOTES SPLICE RAILPOST & RAIL SPLICE LOCATION.

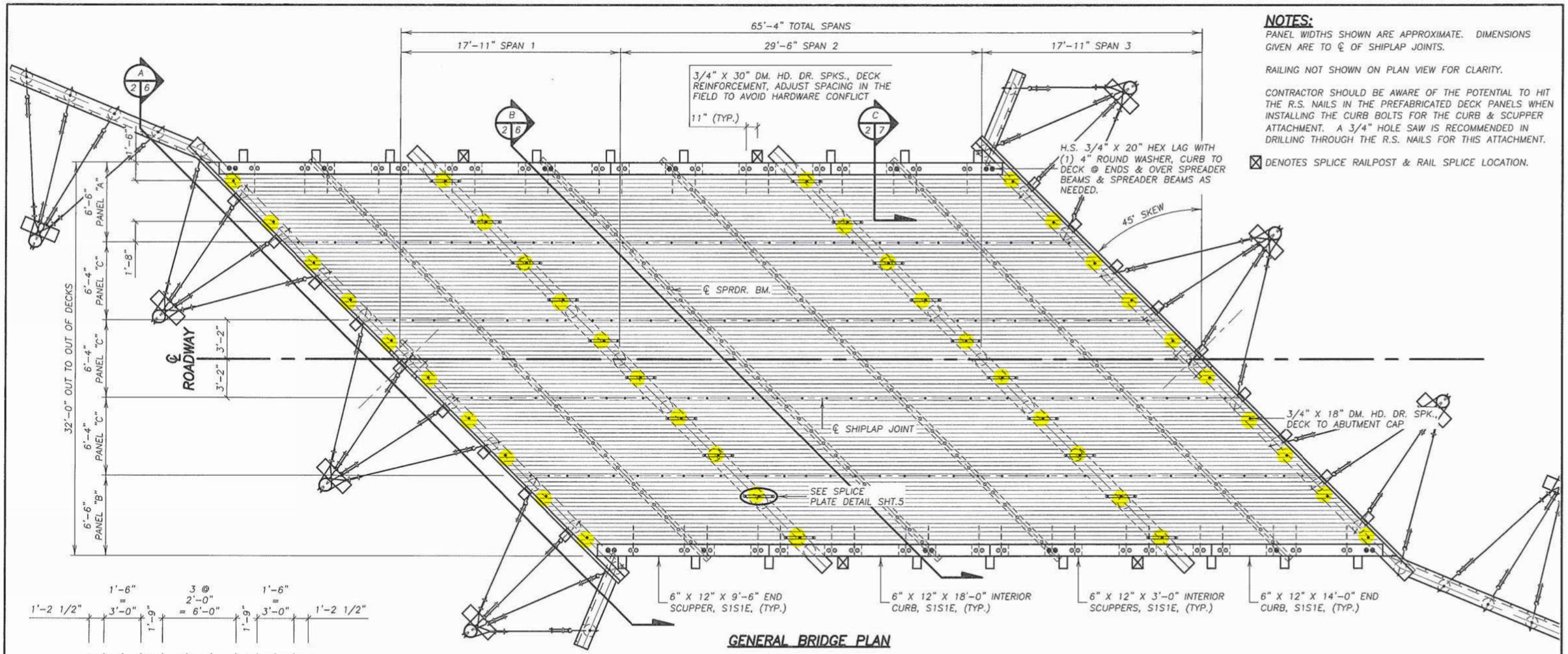

GENERAL BRIDGE PLAN

PANEL SHIPLAP JOINT SPACING DETAIL SPANS 1 & 3

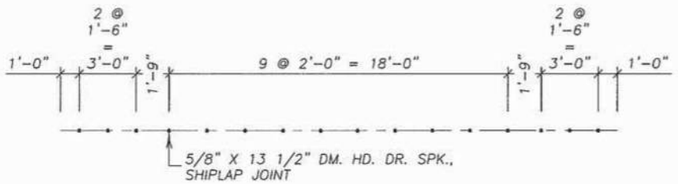

PANEL SHIPLAP JOINT SPACING DETAIL SPAN 2

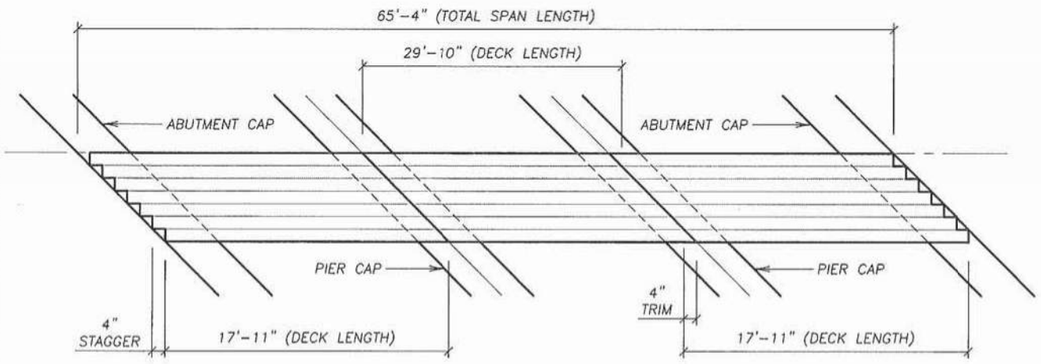

DECK PANEL LAYOUT

NOT TO SCALE

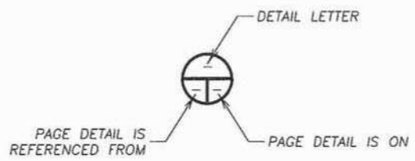

CALLOUT LEGEND

DO NOT SCALE DRAWINGS

ENGINEER'S SIGNATURE AND SEAL ARE TO ASSUME DESIGN RESPONSIBILITY FOR THE TIMBER BRIDGE AS SUPPLIED & DRAWN BY WHEELER LUMBER, LLC, INDEPENDENT OF ITS FINAL POSITION. THIS DESIGN RESPONSIBILITY IS LIMITED TO THE TIMBER BRIDGE AND DOES NOT INCLUDE ANY DESIGN RESPONSIBILITY PERTAINING TO, BUT NOT LIMITED TO, ROADWAY GEOMETRICS, BRIDGE POSITIONING, HYDRAULIC DESIGN, SCOUR ANALYSIS, PERMITTING PROCEDURES, ERECTION, UTILITY FACILITIES, SOIL CONDITIONS, SUBSURFACE PILE DESIGN (INCLUDING PILE LENGTHS), ETC.

GENERAL BRIDGE PLAN & ELEVATION

CLICK ROAD BRIDGE, EMMET COUNTY, MICHIGAN

Wheeler Lumber, LLC
9330 JAMES AVE. S.
BLOOMINGTON, MN 55431

DATE: 4/10/12		TRACKING NO. T16076	SHEET NO.
DWN: LAF	CHK: WEH	ORDER NO. 612-13244	2 OF 7

NOTE:
BURY A MINIMUM OF TWO BACKING PLANK AS SHOWN.

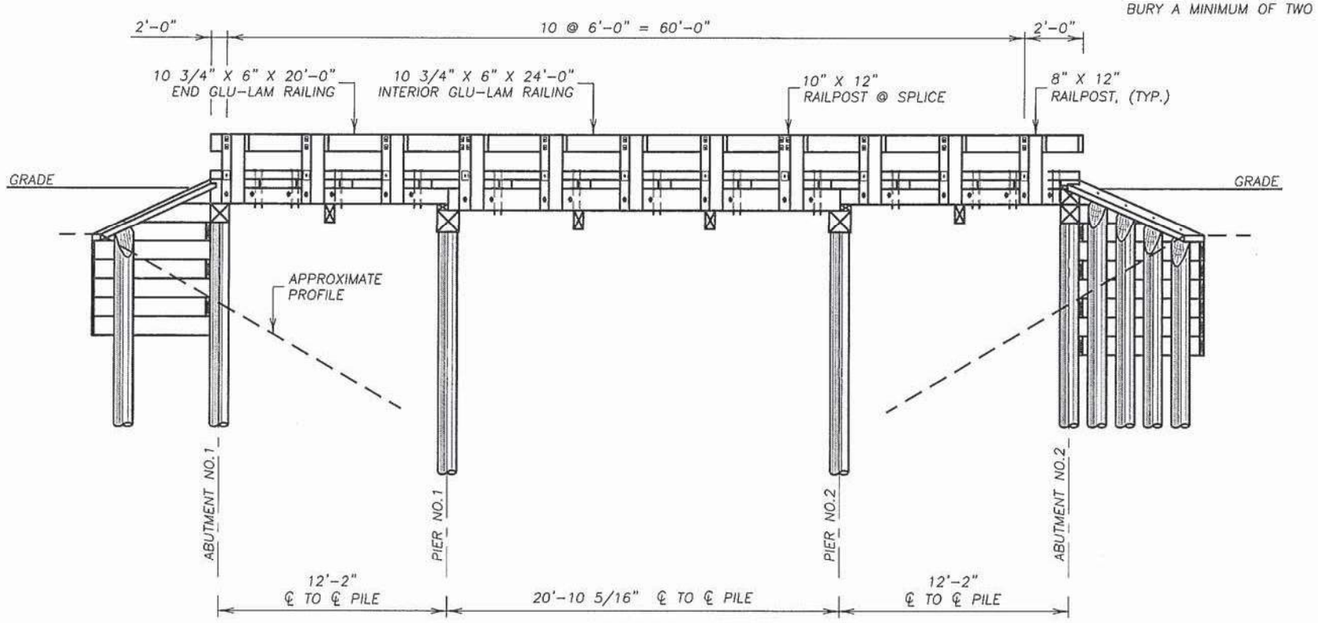

GENERAL BRIDGE ELEVATION
SHOWN NORMAL TO CHANNEL

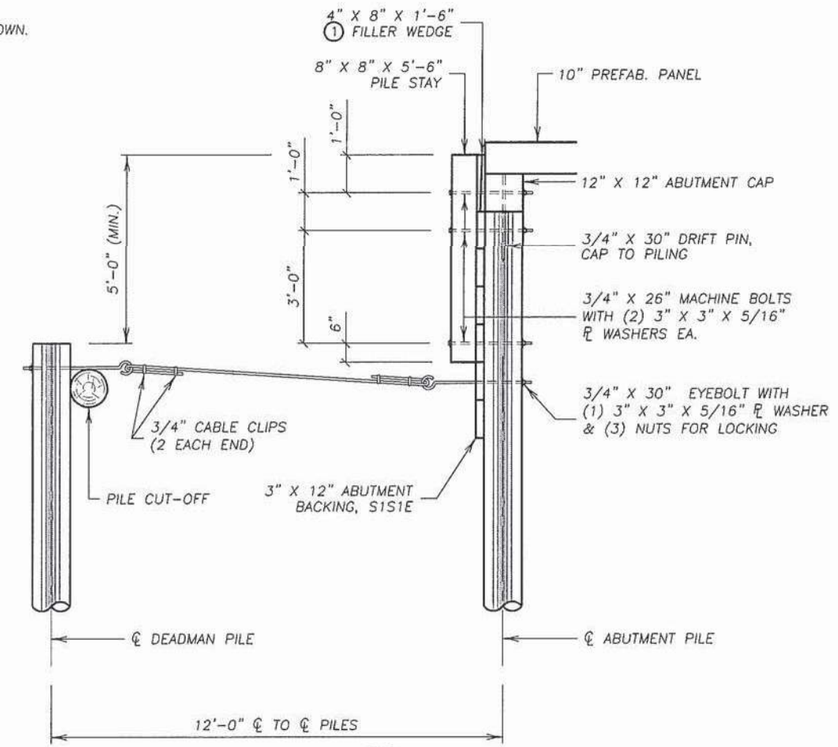

E/4 3 **SECTION @ PILESTAY**

(1) ADDITIONAL FILLER WEDGES MAYBE NEEDED FOR DIRECT CONTACT WITH END OF DECK PANELS.

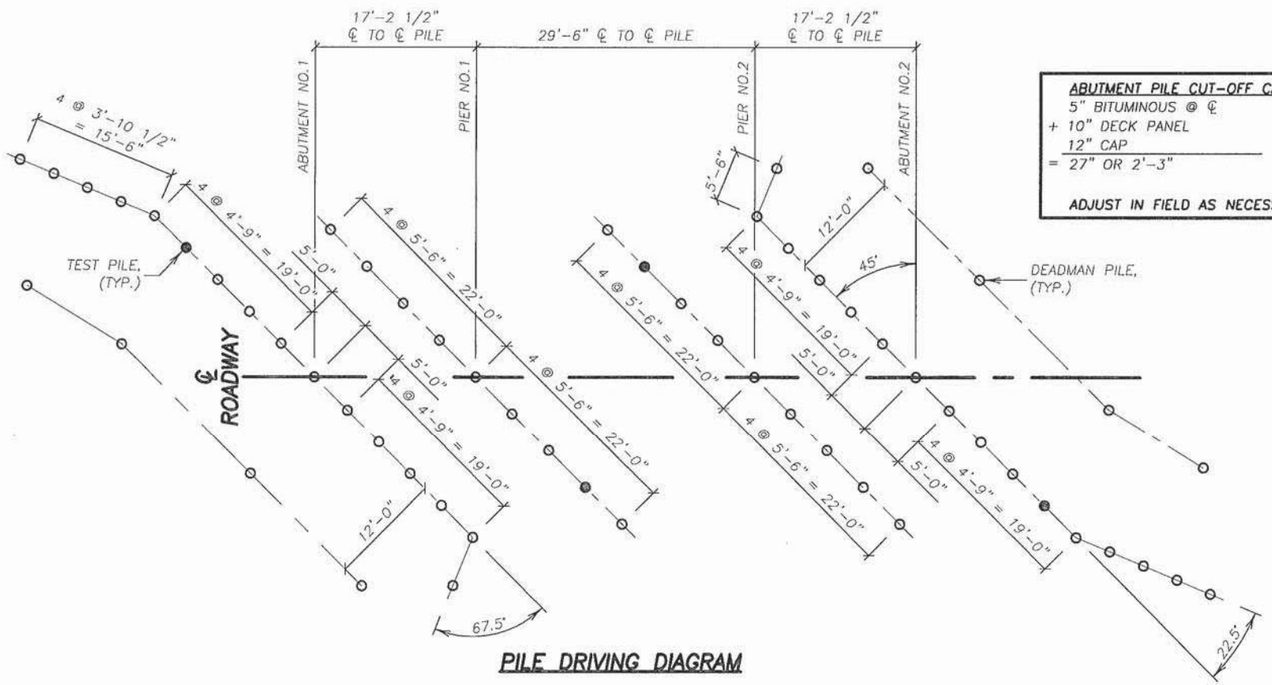

PILE DRIVING DIAGRAM

ABUTMENT PILE CUT-OFF CALCULATIONS
5" BITUMINOUS @ ℄
+ 10" DECK PANEL
12" CAP
= 27" OR 2'-3"
ADJUST IN FIELD AS NECESSARY

PIER PILE CUT-OFF CALCULATIONS
5" BITUMINOUS @ ℄
+ 14" DECK PANEL
14" CAP
= 33" OR 2'-9"
ADJUST IN FIELD AS NECESSARY

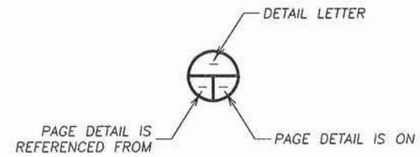

CALLOUT LEGEND

DO NOT SCALE DRAWINGS

ENGINEER'S SIGNATURE AND SEAL ARE TO ASSUME DESIGN RESPONSIBILITY FOR THE TIMBER BRIDGE AS SUPPLIED & DRAWN BY WHEELER LUMBER, LLC, INDEPENDENT OF ITS FINAL POSITION. THIS DESIGN RESPONSIBILITY IS LIMITED TO THE TIMBER BRIDGE AND DOES NOT INCLUDE ANY DESIGN RESPONSIBILITY PERTAINING TO, BUT NOT LIMITED TO, ROADWAY GEOMETRICS, BRIDGE POSITIONING, HYDRAULIC DESIGN, SCOUR ANALYSIS, PERMITTING PROCEDURES, ERECTION, UTILITY FACILITIES, SOIL CONDITIONS, SUBSURFACE PILE DESIGN (INCLUDING PILE LENGTHS), ETC.

GENERAL BRIDGE ELEVATION/PILE DRIVING DIAGRAM
CLICK ROAD BRIDGE, EMMET COUNTY, MICHIGAN

Wheeler
Lumber, LLC
9330 JAMES AVE. S.
BLOOMINGTON, MN 55431

DATE: 4/10/12		TRACKING NO. T16076	SHEET NO.
DWN: LAF	CHK: WEH	ORDER NO. 612-13244	3 OF 7

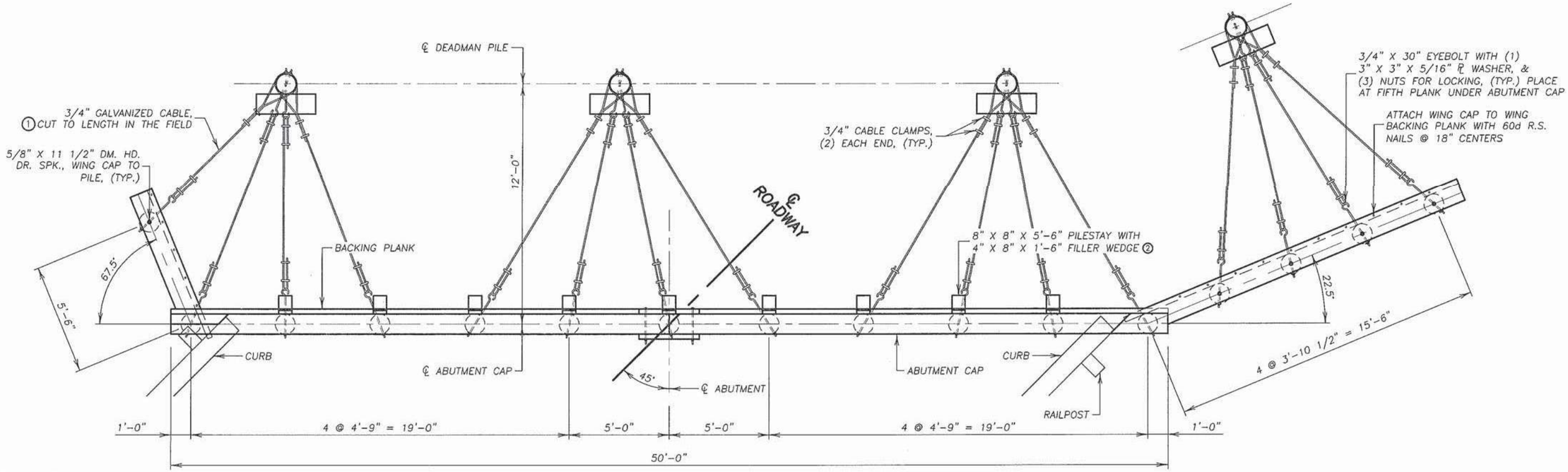

ABUTMENT PLAN & ELEVATION

ABUTMENT PILE NOTES:

(10) CU NAP WING PILES 20 FT. LONG
(20) CU NAP ABUTMENT PILES 25 FT. LONG
(8) CU NAP DEADMAN PILES 20 FT. LONG
(2) CU NAP TEST PILES 35 FT. LONG

COMPUTED UNFACTURED DESIGN LOAD FOR THE ABUTMENT BEARING PILES IS 15 TONS EACH.

PILE LENGTHS SHOWN ARE ESTIMATED. ACTUAL LENGTHS ARE TO BE BASED ON TEST PILE DATA.

MINIMUM PILE PENETRATION TO BE 12 FT. BELOW GROUND LINE.

ABUTMENT NOTES:

FASTEN BACKING TO PILES WITH (2) 60d NAILS @ EACH INTERSECTION.

GEOTEXTILE FABRIC TO BE STAPLED TO BACKSIDE OF ABUTMENTS & WINGS. STAPLES BY CONTRACTOR.

* CUT 2 FROM 1.

① TIGHTEN CABLE SO THERE IS NO VISIBLE SAGGING.

② ADDITIONAL FILLER WEDGES MAYBE NEEDED FOR DIRECT CONTACT WITH END OF DECK PANELS.

PILE CUT-OFFS TO BE FIELD TREATED WITH ONE COAT ASPHALT PAINT SUPPLIED BY BRIDGE MANUFACTURER.

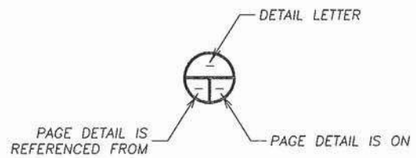

CALLOUT LEGEND

DO NOT SCALE DRAWINGS

ENGINEER'S SIGNATURE AND SEAL ARE TO ASSUME DESIGN RESPONSIBILITY FOR THE TIMBER BRIDGE AS SUPPLIED & DRAWN BY WHEELER LUMBER, LLC. INDEPENDENT OF ITS FINAL POSITION. THIS DESIGN RESPONSIBILITY IS LIMITED TO THE TIMBER BRIDGE AND DOES NOT INCLUDE ANY DESIGN RESPONSIBILITY PERTAINING TO, BUT NOT LIMITED TO, ROADWAY GEOMETRICS, BRIDGE POSITIONING, HYDRAULIC DESIGN, SCOUR ANALYSIS, PERMITTING PROCEDURES, ERECTION, UTILITY FACILITIES, SOIL CONDITIONS, SUBSURFACE PILE DESIGN (INCLUDING PILE LENGTHS), ETC.

ABUTMENT PLAN & ELEVATION
CLICK ROAD BRIDGE, EMMET COUNTY, MICHIGAN

Wheeler Lumber, LLC
9330 JAMES AVE. S.
BLOOMINGTON, MN 55431

DATE: 4/10/12		TRACKING NO. T16076	SHEET NO.
DWN: LAF	CHK: WEH	ORDER NO. 612-13244	4 OF 7

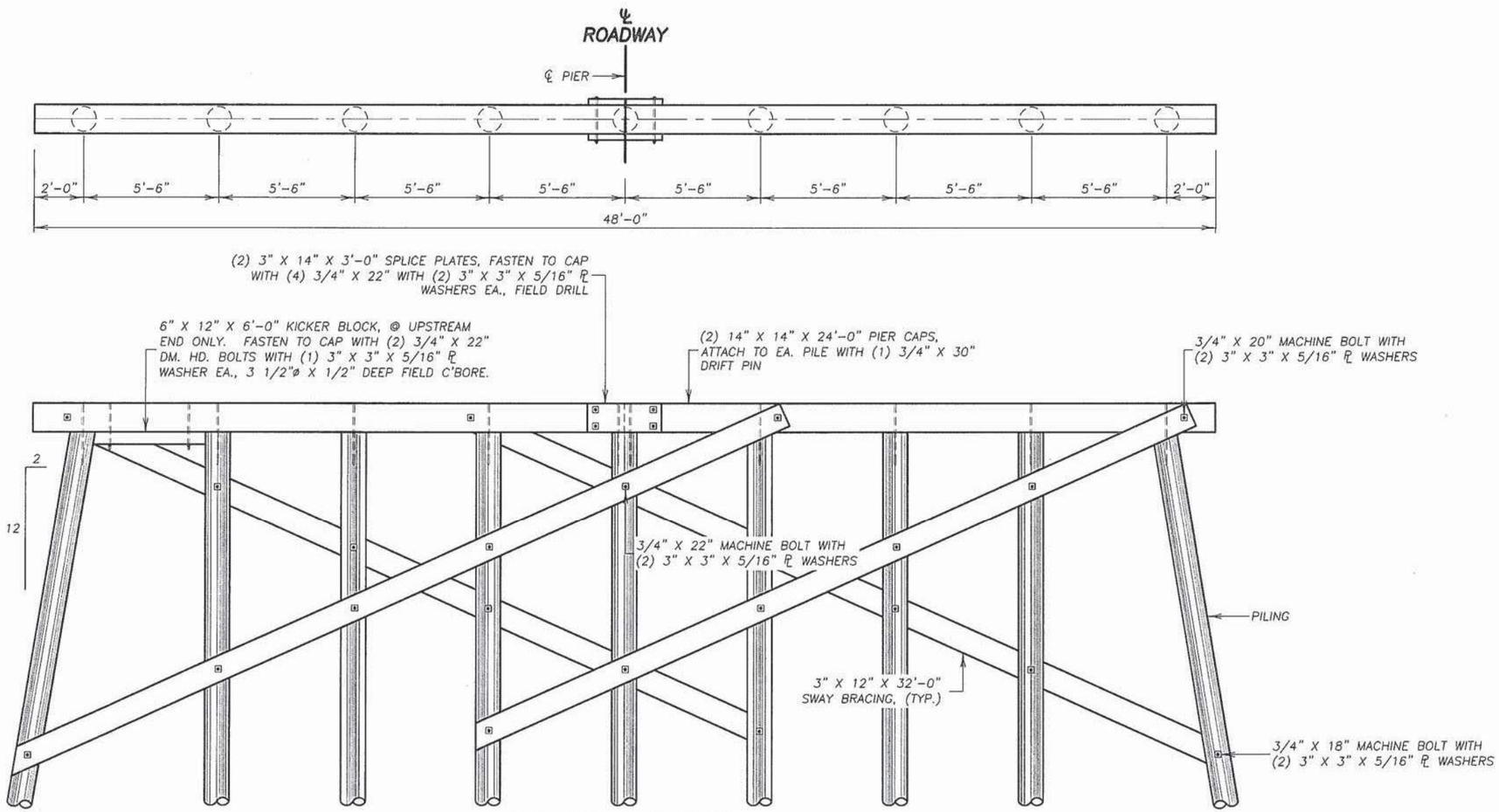

PIER PLAN & ELEVATION

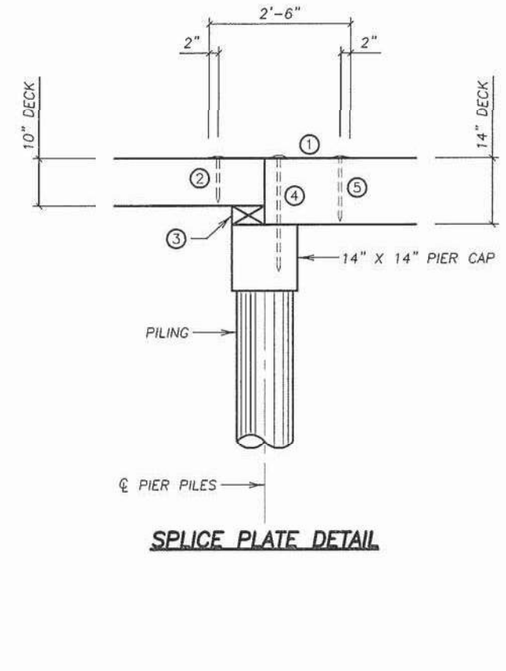

SPLICE PLATE DETAIL

PIER PILE NOTES:

(16) CU NAP PIER PILES 25 FT. LONG
(2) CU NAP TEST PILES 35 FT. LONG

PILE LENGTHS SHOWN ARE ESTIMATED. ACTUAL LENGTHS ARE TO BE BASED ON TEST PILE DATA.

COMPUTED UNFACTURED DESIGN LOAD FOR THE PIER BEARING PILES IS 15 TONS EACH.

PIER SPLICE PLATE NOTES:

1. 2 1/2" X 3/16" X 2'-6" PIER SPLICE PLATE.
2. 5/8" X 9 1/2" DM. HD. DR. SPK. PIER PLATE TO DECK, SPANS 1 & 3.
3. (3) 4" X 8" X 16'-0" FILLER, S1E (7"), ATTACH TO CAP WITH 3/8" X 8" R.S. NAILS @ 2' CENTERS.
4. 3/4" X 26" DM. HD. DR. SPK. SPLICE PLATE TO PIER CAP.
5. 5/8" X 13 1/2" DM. HD. DR. SPK. PIER PLATE TO DECK, SPAN 2.

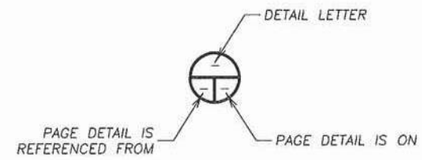

CALLOUT LEGEND

DO NOT SCALE DRAWINGS

ENGINEER'S SIGNATURE AND SEAL ARE TO ASSUME DESIGN RESPONSIBILITY FOR THE TIMBER BRIDGE AS SUPPLIED & DRAWN BY WHEELER LUMBER, LLC, INDEPENDENT OF ITS FINAL POSITION. THIS DESIGN RESPONSIBILITY IS LIMITED TO THE TIMBER BRIDGE AND DOES NOT INCLUDE ANY DESIGN RESPONSIBILITY PERTAINING TO, BUT NOT LIMITED TO, ROADWAY GEOMETRICS, BRIDGE POSITIONING, HYDRAULIC DESIGN, SCOUR ANALYSIS, PERMITTING PROCEDURES, ERECTION, UTILITY FACILITIES, SOIL CONDITIONS, SUBSURFACE PILE DESIGN (INCLUDING PILE LENGTHS), ETC.

PIER PLAN & ELEVATION
CLICK ROAD BRIDGE, EMMET COUNTY, MICHIGAN

Wheeler
Lumber, LLC
9330 JAMES AVE. S.
BLOOMINGTON, MN 55431

DATE: 4/10/12		TRACKING NO. T16076	SHEET NO.
DWN: LAF	CHK: WEH	ORDER NO. 612-13244	5 OF 7

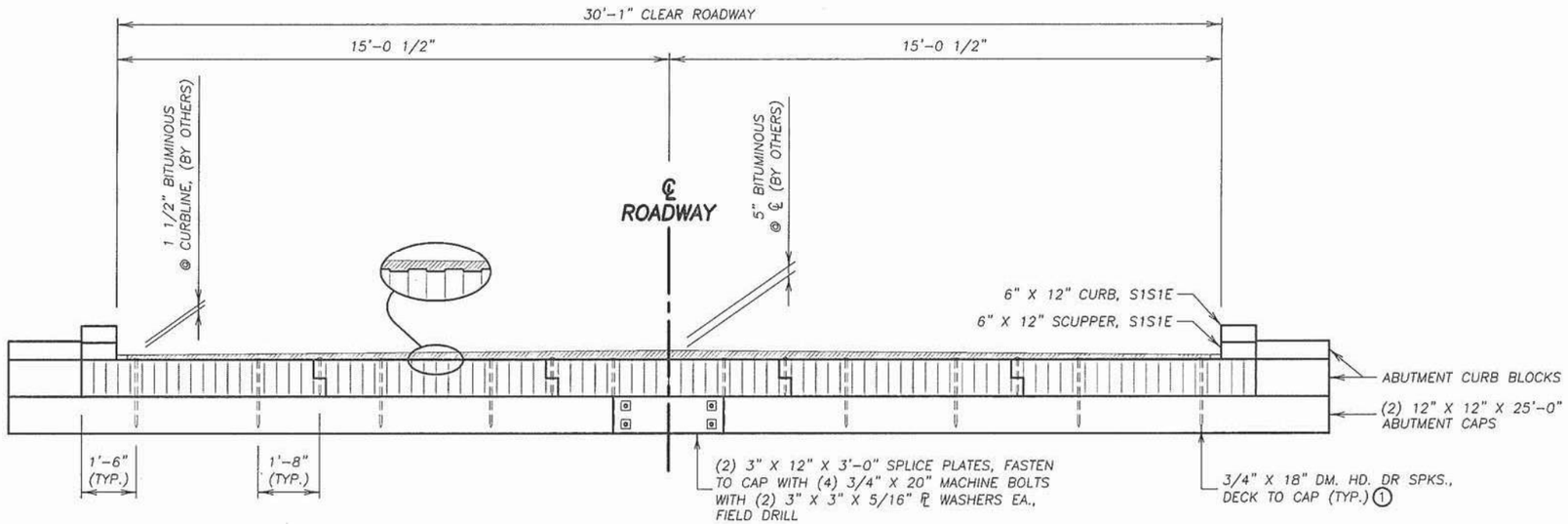

A 2 6 **SECTION THRU DECK @ ABUTMENT**

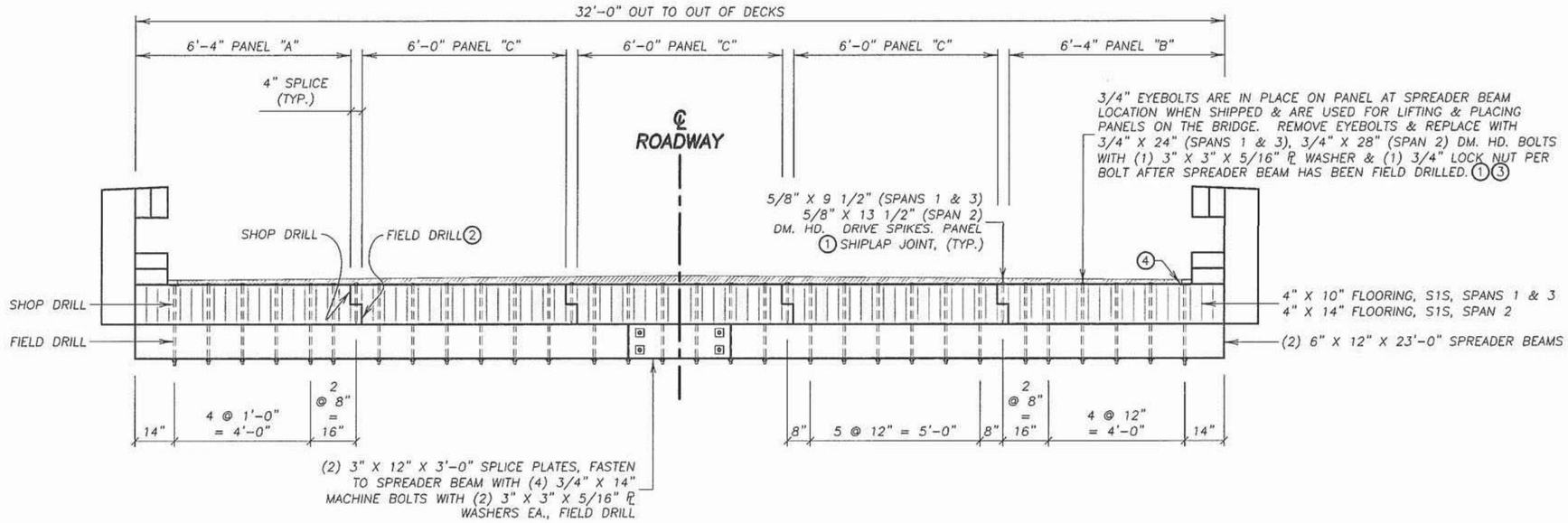

B 2 6 **SECTION THRU DECK @ SPREADER BEAM**

NOTES:

1. ALL HARDWARE PENETRATING THE TOP OR BOTTOM EDGE OF THE DECK PLANK SHALL PASS THROUGH THE CENTER OF THAT EDGE DIMENSION.
2. FIELD DRILLED HOLES IN THE LOWER SPLICE BLOCK OF EACH PANEL ARE TO BE DRILLED COMPLETELY THROUGH THE BLOCK TO PREVENT SPLITTING WHEN INSTALLING THE 5/8" DRIVE SPIKES.
3. THE CONTRACTOR SHALL INSTALL TREATED WOOD SHIMS (SUPPLIED BY CONTRACTOR) IN ALL LOCATIONS WHERE THE TOP OF THE SPREADER BEAM DOES NOT CONTACT THE BOTTOM OF THE DECK PANEL UPON TIGHTENING TO ENSURE SNUG FIT ACROSS ENTIRE DECK WIDTH. THE CONTRACTOR SHALL RETIGHTEN ALL NUTS ON THE LAST DAY OF CONSTRUCTION IN THE PRESENCE OF THE ENGINEER TO ENSURE ALL NUTS ARE PROPERLY TIGHTENED. SET THREADS ON ALL BOLTS AT NUT WITH A CENTER PUNCH AFTER TIGHTENING.
4. THIS 3/4" DOME HEAD BOLT TO BE SHOP C'BORED SO PAVING STRIP CAN REST FLUSH AGAINST DECK ON "A" & "B" PANELS.

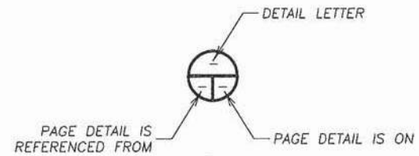

CALLOUT LEGEND

DO NOT SCALE DRAWINGS

ENGINEER'S SIGNATURE AND SEAL ARE TO ASSUME DESIGN RESPONSIBILITY FOR THE TIMBER BRIDGE AS SUPPLIED & DRAWN BY WHEELER LUMBER, LLC, INDEPENDENT OF ITS FINAL POSITION. THIS DESIGN RESPONSIBILITY IS LIMITED TO THE TIMBER BRIDGE AND DOES NOT INCLUDE ANY DESIGN RESPONSIBILITY PERTAINING TO, BUT NOT LIMITED TO, ROADWAY GEOMETRICS, BRIDGE POSITIONING, HYDRAULIC DESIGN, SCOUR ANALYSIS, PERMITTING PROCEDURES, ERECTION, UTILITY FACILITIES, SOIL CONDITIONS, SUBSURFACE, PILE DESIGN (INCLUDING PILE LENGTHS), ETC.

SECTIONS THRU

CLICK ROAD BRIDGE, EMMET COUNTY, MICHIGAN

Wheeler Lumber, LLC
9330 JAMES AVE. S.
BLOOMINGTON, MN 55431

DATE: 4/10/12		TRACKING NO. T16076	SHEET NO.
DWN: LAF	CHK: WEH	ORDER NO. 612-13244	6 OF 7

April 13, 2012 8:43:21 a.m.
Drawing: 13244 PLANS.DWG (TISH) (C:\DOCUMENTS AND SETTINGS\LAURIE\DESKTOP\T16076 13244 EMMET\)

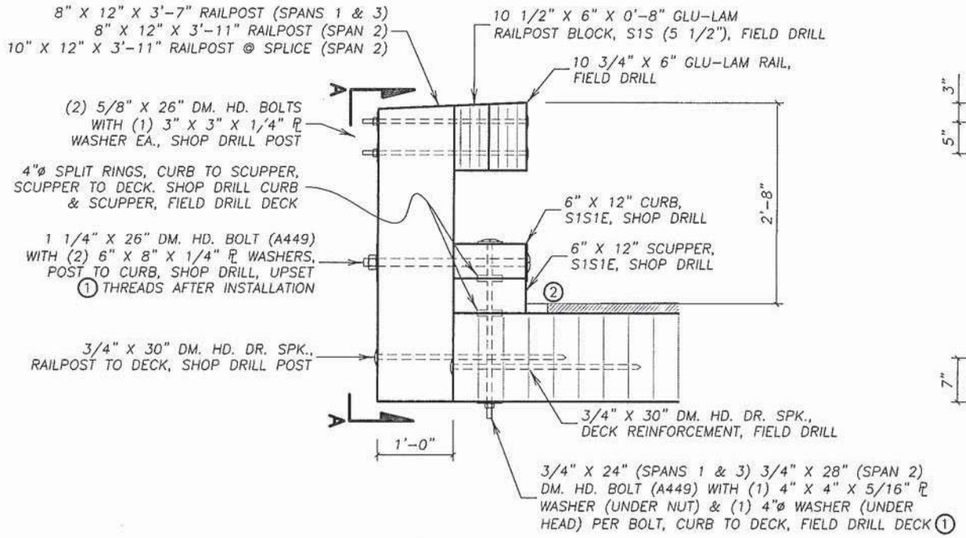

C 2 7 **SECTION @ RAILPOST**

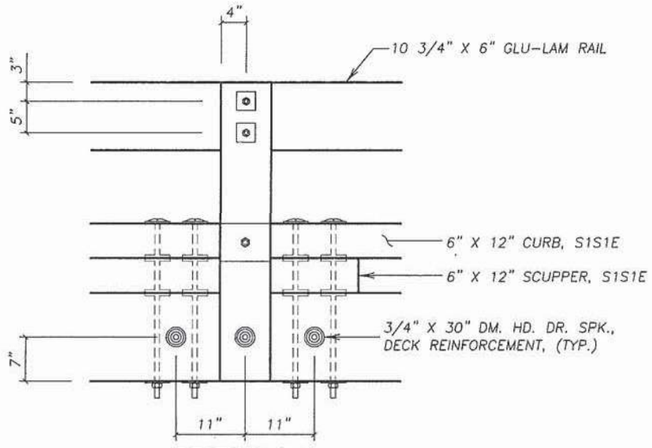

SECTION A-A

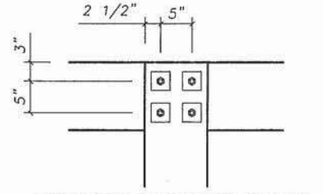

RAILPOST DRILLING DETAIL @ SPLICE

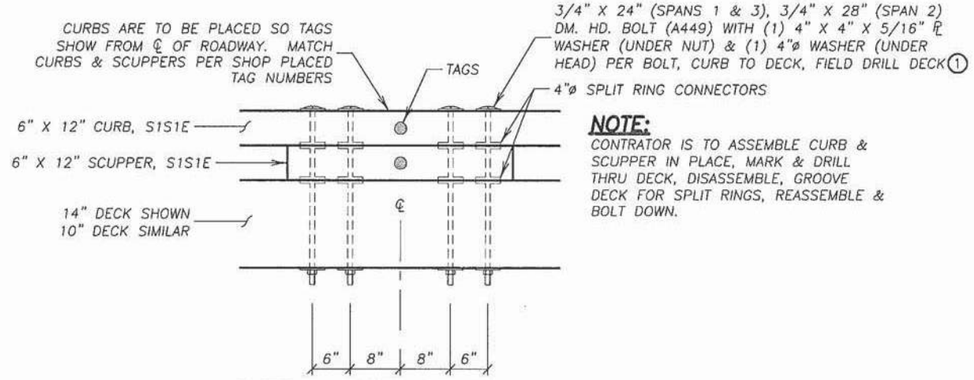

CURB & SCUPPER ASSEMBLY

NOTE:
CONTRATOR IS TO ASSEMBLE CURB & SCUPPER IN PLACE, MARK & DRILL THRU DECK, DISASSEMBLE, GROOVE DECK FOR SPLIT RINGS, REASSEMBLE & BOLT DOWN.

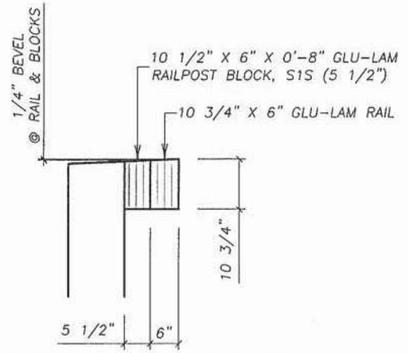

BRIDGE RAIL & RAILPOST BLOCK BEVEL DETAIL

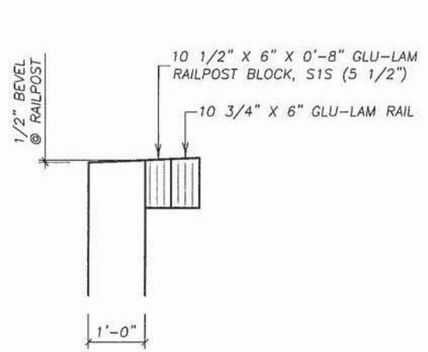

BRIDGE RAILPOST BEVEL DETAIL

NOTES:

(1) ALL HARDWARE PENETRATING THE TOP OR BOTTOM EDGE OF THE DECK PLANK SHALL PASS THROUGH THE CENTER OF THAT EDGE DIMENSION.

(2) HIGH-STRENGTH (A449) DOME HEAD BOLTS DO NOT HAVE FINS UNDER THE HEAD AT THE SHANK.

(3) FASTEN 2" X 4" PAVING STRIP TO DECK WITH (2) 20d NAILS @ 18" CENTERS. PREDRILL HOLES TO AVOID SPLITTING.

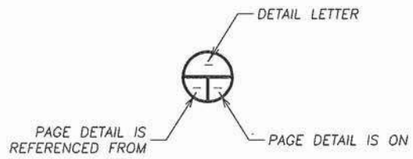

CALLOUT LEGEND

DO NOT SCALE DRAWINGS

ENGINEER'S SIGNATURE AND SEAL ARE TO ASSUME DESIGN RESPONSIBILITY FOR THE TIMBER BRIDGE AS SUPPLIED & DRAWN BY WHEELER LUMBER, LLC, INDEPENDENT OF ITS FINAL POSITION. THIS DESIGN RESPONSIBILITY IS LIMITED TO THE TIMBER BRIDGE AND DOES NOT INCLUDE ANY DESIGN RESPONSIBILITY PERTAINING TO, BUT NOT LIMITED TO, ROADWAY GEOMETRICS, BRIDGE POSITIONING, HYDRAULIC DESIGN, SCOUR ANALYSIS, PERMITTING PROCEDURES, ERECTION, UTILITY FACILITIES, SOIL CONDITIONS, SUBSURFACE PILE DESIGN (INCLUDING PILE LENGTHS), ETC.

RAILPOST SECTION & DETAILS

CLICK ROAD BRIDGE, EMMET COUNTY, MICHIGAN

Wheeler
Lumber, LLC
9330 JAMES AVE. S.
BLOOMINGTON, MN 55431

DATE: 4/10/12		TRACKING NO. T16076	SHEET NO.
DWN: LAF	CHK: WEH	ORDER NO. 612-13244	7 OF 7