Frank Zulski
Wade Williams
Jim Kargol
Brent Shank, PE
Engineer-Manager
Lisa Kleeman
Finance Director

2265 E. Hathaway Road
Harbor Springs, MI 49740
Office: (231) 347-8142
Fax: (231) 347-5787
www.emmetcrc.org

Project: **B153 – Williams Road**

0.48 miles of Culverts, Undercutting, Soil Stabilization Fabric, 12" Sand Lift, Biaxial Geogrid, Aggregate Base, HMA Paving, Gravel Shouldering, Slope Restoration and Pavement Markings.

The Emmet County Road Commission will accept Bids until **9:00 a.m.** local time on **November 17, 2026** at: 2265 E. Hathaway Road, Harbor Springs, MI 49740. Bid packages are available at the Emmet County Road Commission Office or on Emmet County Road Commission website at www.emmetcrc.org.

ALL BIDS WILL BE SEALED AND PLAINLY MARKED AS TO THE PROJECT AND PROJECT NUMBER. MAILED BIDS MUST BE RECEIVED BY 3:30 P.M. THE PREVIOUS EMMET COUNTY ROAD COMMISSION BUSINESS DAY PRIOR TO BID OPENING.

The bidder has examined the plans, specification, special provisions and related materials in the proposal, as well as the location of the work described in the proposal for this project, and is fully informed as to the nature of the work and conditions relating to its performance and understands that the quantities shown are approximate only and are subject to either increase or decrease.

The bidder hereby proposes to furnish all necessary machinery, tools, apparatus and other means of construction, do all the work, furnish all the materials except as otherwise specified and, or each unit price, lump sum, or one each named in the itemized bid, to complete the work in strict conformity with the plans therefore and the entire proposal which is incorporated by reference in these pages, and in strict conformity with the requirements of the 2020 Standard Specifications for Construction, Michigan Department of Transportation and such other special provisions and supplemental specifications as may be part of the proposal for this project.

The bidder further proposes to do such extra work as may be authorized by the Emmet County Road Commission, prices for which are not included in the itemized bid. Compensation shall be made on the basis agreed upon before such extra work is begun.

THE BIDDER UNDERSTANDS AND AGREES THAT THE EMMET COUNTY ROAD COMMISSION RESERVES THE RIGHT TO REJECT ANY AND ALL BIDS; TO WAIVE IRREGULARITIES OR INFORMALITIES; AND NO CONTRACTUAL RELATIONSHIP SHALL EXIST BETWEEN THE BIDDER AND THE EMMET COUNTY ROAD COMMISSION FOR THE WORK DESCRIBED HEREIN UNTIL SUCH TIME AS THE CONTRACT HAS BEEN FORMALLY EXECUTED BY BOTH THE BIDDER AND THE EMMET COUNTY ROAD COMMISSION.

The Emmet County Road Commission, in accordance with Title VI of the Civil Rights Act of 1964, 78 Stat. 252, 42 U.S.C 2000d to 2000d-4 and Title 49, Code of Federal Regulations, Department of Transportation, Subtitle A, Office the Secretary, Part 21, Nondiscrimination in Federally assisted programs of the Department of Transportation issued pursuant to such Act, hereby notifies all bidders that it will affirmatively insure that in any contact entered into pursuant to this advertisement, minority business enterprises will be afforded full opportunity to submit bids in response to this invitation and will not be discriminated against on the grounds of race, color, or national origin in consideration for an award.

EMMET COUNTY ROAD COMMISSION

IN COOPERATION WITH

BEAR CREEK TOWNSHIP

PLANS OF PROPOSED ROAD IMPROVEMENTS

WILLIAMS ROAD

CEMETERY ROAD TO US-131

SECTION 19, T 34 N, R 5 W
BEAR CREEK TOWNSHIP
EMMET COUNTY, MICHIGAN

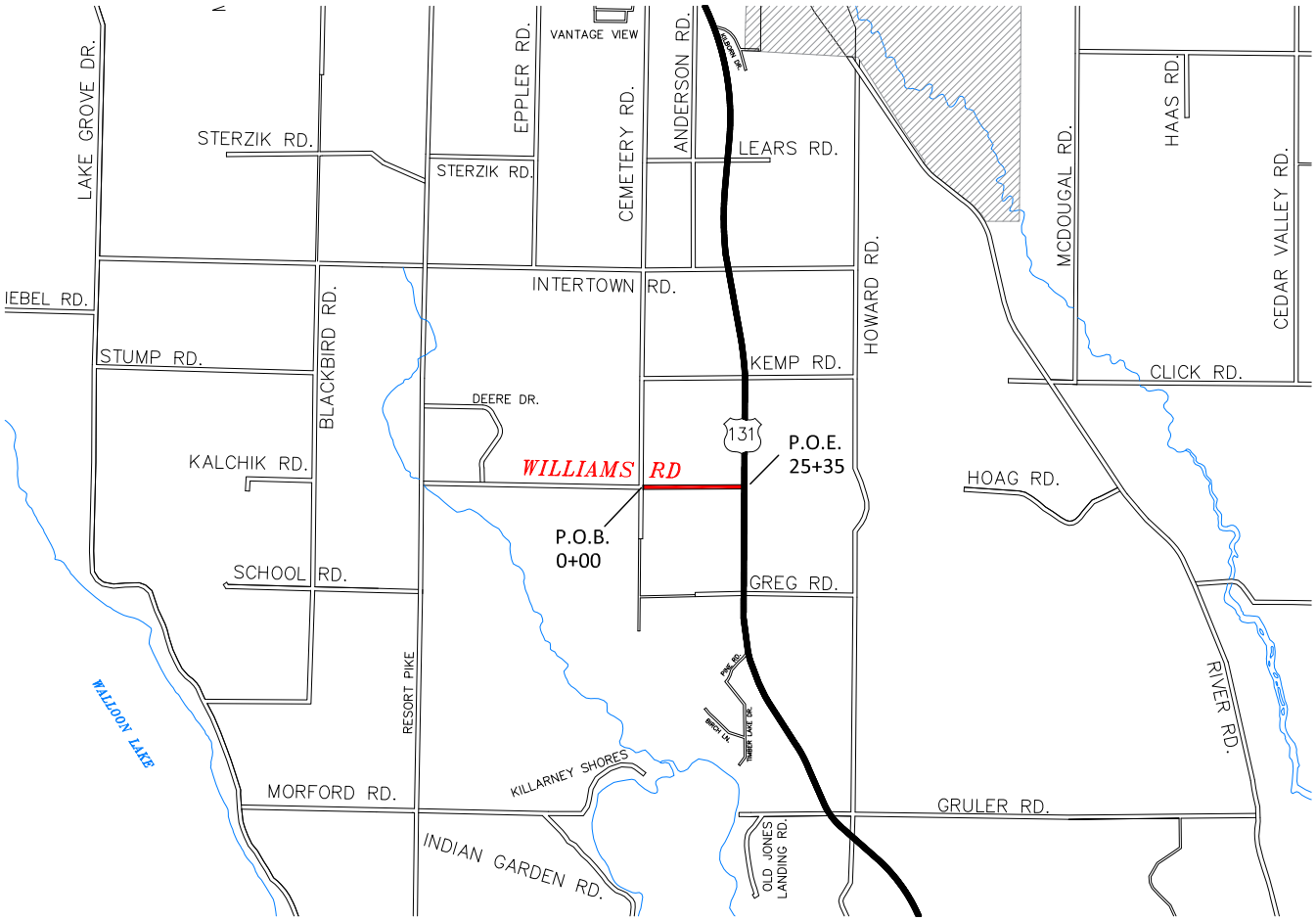

MISS DIG 811

800-482-7171

CONTRACT FOR:
0.48 MILES OF CULVERTS, UNDERCUTTING, SOIL STABILIZATION FABRIC, 12" SAND LIFT, BIAXIAL GEOGRID, AGGREGATE BASE, HMA PAVING, GRAVEL SHOULDERING, SLOPE RESTORATION AND PAVEMENT MARKINGS.

EXCEPT WHERE OTHERWISE NOTED IN THESE PLANS, PROPOSAL, SUPPLEMENTAL SPECIFICATIONS OR SPECIAL PROVISIONS, ALL MATERIALS AND WORKMANSHIP SHALL BE IN ACCORDANCE WITH THE MICHIGAN DEPARTMENT OF TRANSPORTATION 2020 STANDARD SPECIFICATIONS FOR CONSTRUCTION.

EMMET COUNTY ROAD COMMISSION
2265 EAST HATHAWAY ROAD - HARBOR SPRINGS, MI

DESCRIPTION OF WORK

0.48 miles of Culverts, Undercutting, Soil Stabilization Fabric, 12" Sand Lift, Biaxial Geogrid, Aggregate Base, HMA Paving, Gravel Shouldering, Slope Restoration and Pavement Markings.

SPECIFICATIONS

The improvements covered by these plans shall be done in accordance with the Michigan Department of Transportation 2020 Standard Specifications for Construction as amended by Supplemental Specifications and Special Provisions.

PROJECT DATES

A pre-construction meeting will be scheduled by the Emmet County Road Commission prior to project start. All project submittals are to be submitted for review at this meeting.

Project Start Date:	10 days after all Contracts are executed.
Project Completion Date:	October 1, 2027 (All Project Items)

The project shall be completed within thirty (30) calendar days of starting date.

PROJECT SUBMITTALS

The following shall be submitted to the Road Commission Engineer for approval prior to project start:

1. Material Source List (MDOT Form 501)
2. Progress Schedule (must be submitted within 5 days of Contract award)
3. See the Special Provision for Acceptance of HMA Mixtures on Township Projects for submittal requirements (must be submitted prior to paving)
4. Damage Claim Program
5. Traffic Control Plan
6. Safety Program

Upon project completion, the Contractor shall submit a written "Notice of Completion" to the Engineer. After the Engineer receives the Notice of Completion, the Engineer will inspect the project. The Engineer will provide a list of any deficient items (Punch List) to the Contractor. Final acceptance will only be issued when any deficient items are addressed to the satisfaction of the Engineer. Final acceptance will be provided to the Contractor in writing.

TECHNICAL SPECIFICATIONS ORDER OF PREFERENCE

The technical specifications for the project shall be in accordance with the 2020 Standard Specifications for Construction of the Michigan Department of Transportation, as amended, hereinafter referred to as the "Standard Specifications".

In case of a conflict in the contract, the following establishes the order of precedence:

1. ECRC Proposal and Project Specifications
2. Special Provisions
3. MDOT Supplemental Specifications
4. MDOT Standard Plans
5. MDOT Standard Specifications

The Engineer has the right to increase or decrease quantities based on unit prices bid. Final quantities will be based on the unit price bid per estimated quantities and can be adjusted by the Engineer without adjustment in unit price bid by Contractor

STANDARD PLANS & SPECIAL DETAILS

The following items shall be constructed in accordance with the referenced Standard Plan or Special Detail listed below unless otherwise specified.

Road Standard Plans

R-11-E	Monument Boxes
R-74-D	Bumper & Parking Rails and Misc. Wood Posts
R-82-D	Bedding and Filling around Pipe Culverts
R-96-E	Soil Erosion & Sedimentation Control Measures

Pavement Marking Standards

PAVE-905-E	Longitudinal Line Types and Placement

Traffic & Safety Work Zone Special Details

WZD-100-A	Ground Driven Sign Supports for Temp Signs
WZD-125-E	Temporary Traffic Control Devices

PROJECT STATIONS

Station	Notes
0+00	**P.O.B.**
0+50 R	Centerline of **Cemetery Road** **Excavation, Earth** (101 Cyd) **Subbase, CIP** (65 Cyd) **Geotextile Stabilization** (183 Syd) **Road Grade Biaxial Geogrid** (183 Syd) **Approach, Cl I** (56 Ton) **Shld, Cl II** (40 Ton) **HMA Approach** (30 Ton) **Monument Box** (1 Ea) **Monument Preservation** (1 Ea)

0+50 L	Centerline of **Cemetery Road** **Excavation, Earth** (130 Cyd) **Subbase, CIP** (80 Cyd) **Geotextile Stabilization** (234 Syd) **Road Grade Biaxial Geogrid** (234 Syd) **Shld, Cl II** (10 Ton) **Approach, Cl I** (71 Ton) **HMA Approach** (39 Ton)
0+75	Cross Culvert **Culv, Rem, Less than 24 inch** (1 Ea) **Culv, Cl A, 15 inch** (55 Ft)
1+93 R	Gravel Driveway **HMA, 4EL** (1 Ton) **Shld, Cl II** (2 Ton)
1+93 L	Mailbox Taper **HMA, 4EL** (2 Ton) **Post, Mailbox** (1 Ea)
7+40 R	Gravel Driveway **HMA, 4EL** (1 Ton) **Shld, Cl II** (2 Ton)
7+40 L	Mailbox Taper **HMA, 4EL** (2 Ton) **Post, Mailbox** (1 Ea)
8+83 R	Paved Driveway **HMA Surface, Rem** (34 Syd) **Approach, Cl I** (10 Ton) **HMA Approach** (6 Ton) **HMA, 4EL** (1.0 Ton) **Shld, Cl II** (2 Ton)
8+83 L	Mailbox Taper **HMA, 4EL** (2 Ton) No adjustment needed
9+60 L	**Annies Way** (Private Road) Remove HMA to face of existing Concrete Curbs **HMA Surface, Rem** (150 Syd) **Approach, Cl** (10 Ton) **HMA Approach** (330 lbs/Syd) (30 Ton)
13+80 L	Gravel Driveway **Shld, Cl II** (5 Ton)
14+48 L	Gravel Driveway **Shld, Cl II** (5 Ton)
15+10 L	Gravel Driveway with Mailbox Taper **Shld, Cl II** (5 Ton) **Post, Mailbox** (1 Ea)
15+40 R	Gravel Driveway **Shld, Cl II** (5 Ton)
16+03 R	Gravel Driveway

	Shld, Cl II (5 Ton)
18+70 R	Gravel Driveway **Shld, Cl II** (5 Ton)
20+24 R	Gravel Driveway **Shld, Cl II** (5 Ton)
20+24 L	Mailbox **Post, Mailbox** (1 Ea)
21+35 L	Gravel Driveway **Shld, Cl II** (5 Ton)
22+50 R	Gravel Driveway **Shld, Cl II** (5 Ton)
22+50 L	Mailbox **Post, Mailbox** (1 Ea)
25+35	**P.O.E.** at Paing Joint
26+00	Centerline of **US-131**

MAINTAINING TRAFFIC

Maintain traffic using traffic regulators in accordance with MDOT Maintaining Traffic Typical 110-TR-NFW-2L. Traffic shall be maintained during the project through the use of lane closures, two way traffic shall be open during non-working hours. The Contractor shall coordinate operations with contractors performing work on other projects within or adjacent to the Construction Influence Area (CIA).

The Construction Influence Area for this project shall consist of the width of the project right of way, and the width of the right of way on intersecting roads, from a point where advance construction warning signing begins to a point where it ends.

At no time may Traffic Control Stop and Hold traffic, including loaded & unloaded asphalt trucks on the new HMA surface.

Advanced Warning signs shall be in place before any work begins.

Payment for all traffic control, signing and traffic control items shall be paid for as **Traffic Control.**

Item	Quantity	Unit
Traffic Control, Max $10,200	1	LSUM

PROPOSED IMPROVEMENTS

Earthwork

All earthwork will be paid at plan quantity unless specified. All HMA Surface, Rem within the excavation limits shall be paid for as part of Excavation, Earth.

Culverts

Culvert Lengths are Installed Length (no "C" Dimensions). If a Culvert End Section is required by plans or as directed by Engineer, Place end section on Installed Length of Culvert.

The Contractor shall keep culverts free and clean of sediment during the project.

Aggregate Base

Aggregate base shall use aggregate 22A, unless otherwise specified.

Aggregate Base Application Rate:

Station	Location	Application Rate
0+00 to 25+35	Williams Road	94.37 Tons/Sta (2393 Ton)
0+00 to 25+35	Provisional	Variable (107 Ton)

Unless otherwise approved by the Engineer, The HMA Paving Contractor shall be required to provide fine grading of the Aggregate Base prior to paving.

HMA Paving

See the attached Special Provision for Acceptance of HMA Mixture for HMA mixture specifications.

HMA APPLICATION TABLE					
Label	**Mix**	**Application Rate** (Lbs/Syd)	**Design Performance Grade**	**Comments**	**Pay Item**
T	HMA, 4EL	165	58-28	Top Course	HMA, 4EL
L	HMA, 4EL	165	58-28	Leveling Course	HMA, 4EL
AT	HMA, 4EL	165	58-28	Approach Top	HMA Approach
AL	HMA, 4EL	165	58-28	Approach Leveling	HMA Approach
A	HMA, 4EL	220	58-28	Approach (Paved Driveways)	HMA Approach
1	AWI = 220 for all HMA, 4EL, HMA, 5EL and Ultra-thin.				
2	Apply HMA Bond Coat at 0.10 gallons per square yard between paving courses or as directed by the Engineer. Paid for as part of other HMA items.				

Where applicable, or as directed by the Engineer, an acceptable form of grade control (automation) shall be used with the paver at all times.

Curb Slp, HMA

Locations:
11+00 R to 24+00 R – **Curb Slp, HMA** (1300 Ft)
10+00 L to 24+00 R– **Curb Slp, HMA** (1400 Ft)

Paved Ditch, HMA

Locations:
11+00 R – **Paved Ditch, HMA** (10 Syd), **Riprap, Plain** (10 Syd)
11+00 L – **Paved Ditch, HMA** (10 Syd), **Riprap, Plain** (10 Syd)
19+40 R – 90° Spillway **Paved Ditch, HMA** (15 Syd), **Riprap, Plain** (15 Syd)
19+40 L – 90° Spillway **Paved Ditch, HMA** (15 Syd), **Riprap, Plain** (15 Syd)
24+00 R – **Paved Ditch, HMA** (10 Syd), **Riprap, Plain** (10 Syd)
24+00 L – **Paved Ditch, HMA** (10 Syd), **Riprap, Plain** (10 Syd)

Shoulders

Contractor shall place Shld, Cl II material 2.0 feet wide or as specified by the engineer. When placing shoulder aggregate, material shall be placed directly on the shoulder. Shoulder material may not be placed on the asphalt. Shoulder material shall be flushed to the edge of pavement. Shoulders shall be wheel rolled with heavy equipment for density. The Contractor is responsible to ensure positive drainage on gravel shoulders. The Contractor will be responsible for repairing, at the Contractor's expense, standing water or other drainage related issues.

Shld, Cl II material shall be a Dense-Graded Aggregate, 23A or 23AA, 100% crushed limestone.

All Approach, Cl II material shall be paid for as Shld, Cl II, unless otherwise noted or directed by Engineer.

The Contractor shall provide a scale ticket for each load delivered to the job at the time of delivery or at the end of the day to the owner's representative. All scale tickets shall meet MDOT requirements. The Contractor shall provide current scale certification to the Road Commission prior to hauling material. Loader scales will not be accepted. Any exceptions shall be noted on the bid sheet for the project.

The Contractor shall schedule shoulder material placement in a timely manner to reduce the time that an edge drop off exists. The Contractor shall place shoulder material within 7 calendar days of paving completion. If the Contractor fails to place shoulder material, the Road Commission will levy liquidated damages of $200.00 per calendar day that the edge drop off exists.

Driveway Improvements

Driveways shall be improved as shown on the Detail sheets. All approaches shall be treated on a case-by-case basis, and the limits of work may be adjusted, as directed by the Engineer.
The Contractor is responsible to ensure positive drainage in all approaches. The Contractor will be responsible for repairing, at the Contractor's expense, standing water or other drainage related issues.

The Contractor shall be responsible to maintain access to driveways after paving. On any driveway that has more than 4 inches of drop off the Contractor shall provide a gravel apron that reduces the drop off to a maximum of 4 inches on the day of paving or the next calendar day. If the Contractor fails to provide such access, the Road Commission will levy liquidated damages of $200.00 per calendar day that a drop off exceeds 4 inches in any driveway.

Gravel Driveways:
Place Shld, Cl II material in gravel driveways as part of the gravel shoulder operation. Driveways shall be blended 4.0' – 6.0' from the edge of the roadway to a slope no greater than 10%, or as directed by the Engineer.

Paved Driveways:
Paved driveways shall be cut 30.0 feet from the centerline, or as directed, of existing pavement (payment included as part of HMA Surface, Rem.) All driveway cuts will be marked by the Engineer, cut location may be adjusted to provide a driveway slope 10% or less. Any additional gravel needed to shape the paved approach areas shall be paid for as Approach, Cl I. Driveways shall be graded and paved after the HMA surface on mainline is placed, unless otherwise instructed by the Engineer.

Slope Restoration

When placing the topsoil, material shall be placed directly on the shoulder. Topsoil material may not be placed on the asphalt. Shoulder material shall be flushed to the edge of gravel shoulder and blended to the existing shoulder on the outside as to not create a secondary front slope. Topsoil shall be wheel rolled with heavy equipment for density.

A sample fertilizer bag and seed ticket, from the materials used on the project, must be submitted to the Engineer within 7 days of completion of restoration.

Seed Mixture shall be TDS or equivalent.

Chemical fertilizer nutrient, Class B

A Topsoil Test **will not** be required to be performed by the contractor and rereview by the Engineer in accordance with section 917.06 the 2020 Standard Specifications for Construction of the Michigan Department of Transportation.

The following percentages of furnished and salvaged topsoil are estimates for this project and provided for informational purposes only.

Topsoil Furnished: 100 percent
Topsoil Salvaged: 0 percent

Place Mulch and Mulch Anchoring on all topsoil surfaces. Mulch material shall be straw.

Culverts, driveways, spillways and rip rap shall be free and clean of straw upon completion of mulching activities

Item	Quantity	Unit
Culv, Rem, Less than 24 inch	1	Ea
Excavation, Earth	4625	Cyd
Subbase, CIP	2774	Cyd
Aggregate Base	2500	Ton
Approach, Cl I	177	Ton
Shld, Cl II	180	Ton
Geotextile, Stabilization	8304	Syd
Road Grade Biaxial Geogrid	8304	Syd
Culv, Cl A, 15 inch	55	Ft
HMA Surface, Rem	184	Syd
HMA Approach	105	Ton
HMA, 4EL	1621	Ton
Curb Slp, HMA	2700	Ft
Riprap, Plain	70	Syd
Paved Ditch, HMA	70	Syd
Slope Restoration, Non Freeway, Type A	5000	Syd

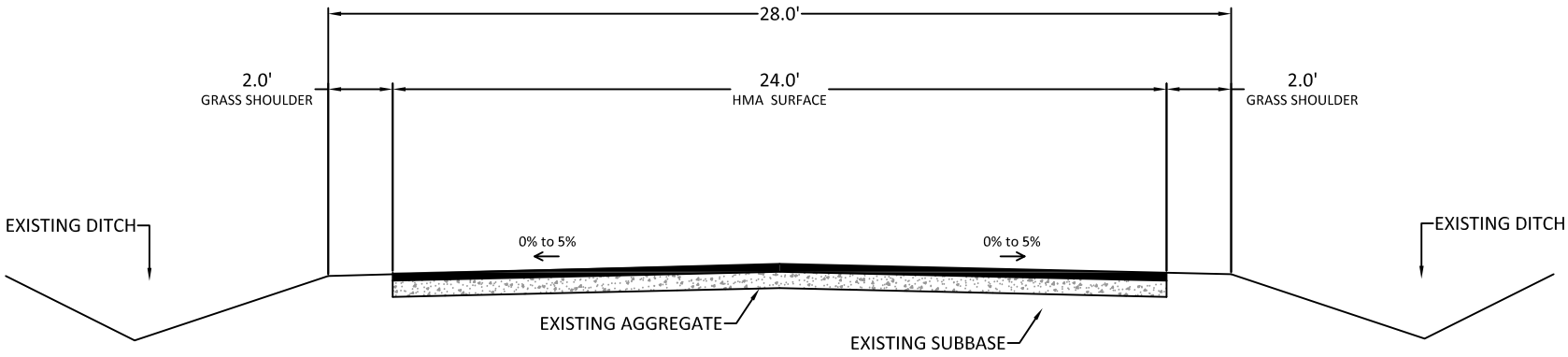

EXISTING SECTION

STATION 0+00 TO 30+00

NO SCALE

DATE:
10/12/26

WILLIAMS ROAD

TYPICAL SECTION

EMMET COUNTY ROAD COMMISSION
2265 E HATHAWAY ROAD · HARBOR SPRINGS, MI 49740 · (231) 347-8142

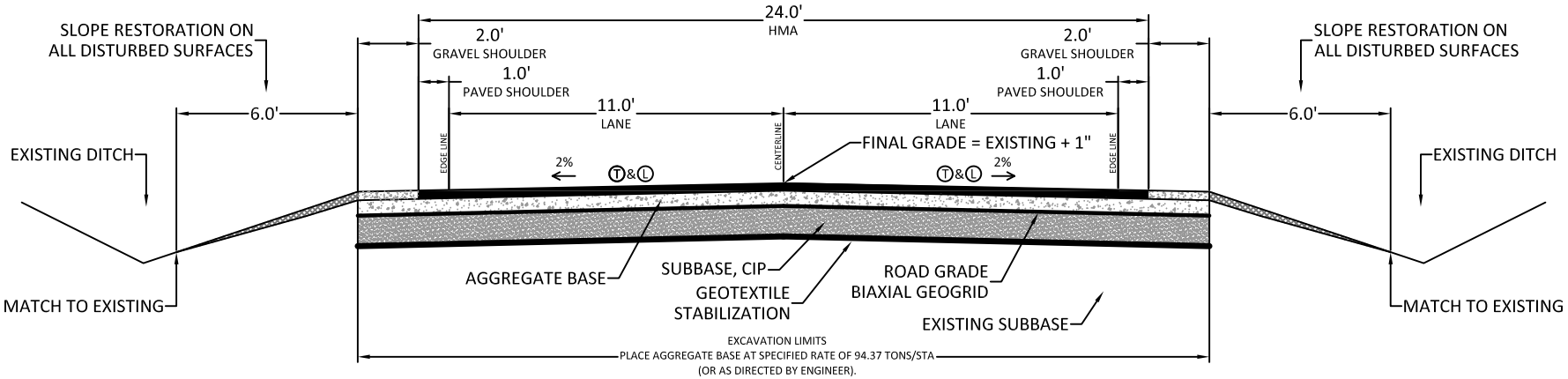

TYPICAL SECTION

STATION 0+00 TO 11+00 & 24+00 TO 25+36

NO SCALE

DATE:
10/12/26

WILLIAMS ROAD

TYPICAL SECTION

EMMET COUNTY ROAD COMMISSION
2265 E HATHAWAY ROAD · HARBOR SPRINGS, MI 49740 · (231) 347–8142

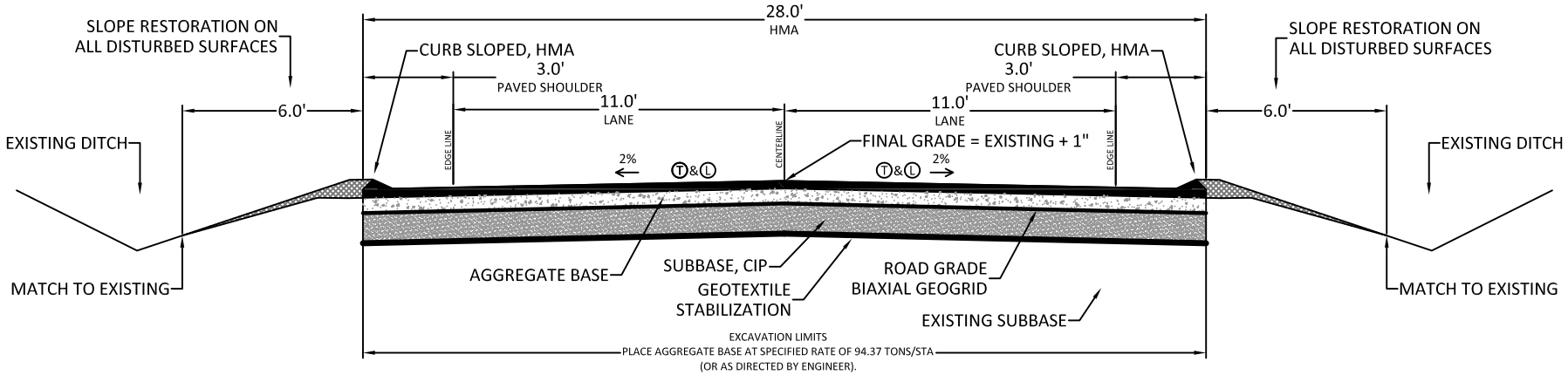

TYPICAL SECTION

STATION 11+00 TO 24+00

NO SCALE

DATE: 10/12/26

WILLIAMS ROAD

TYPICAL SECTION

EMMET COUNTY ROAD COMMISSION
2265 E HATHAWAY ROAD · HARBOR SPRINGS, MI 49740 · (231) 347–8142

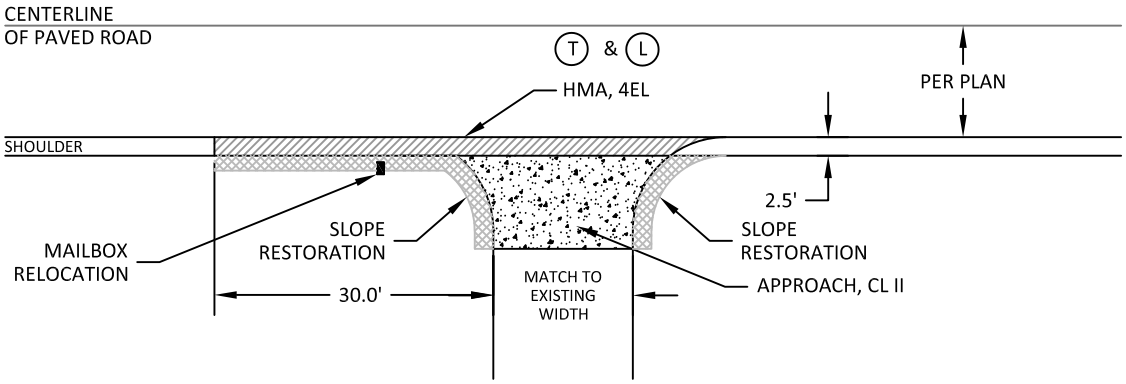

DRIVEWAY DETAILS - GRAVEL DRIVEWAY WITH MAILBOX TAPER

NO SCALE

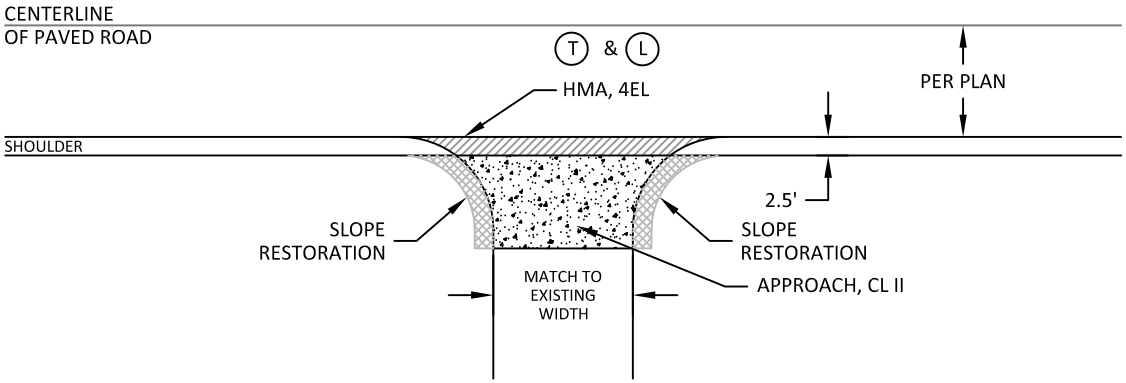

DRIVEWAY DETAILS - GRAVEL DRIVEWAY

NO SCALE

DATE:
10/12/26

WILLIAMS ROAD

DRIVEWAY DETAILS

EMMET COUNTY ROAD COMMISSION
2265 E HATHAWAY ROAD · HARBOR SPRINGS, MI 49740 · (231) 347–8142

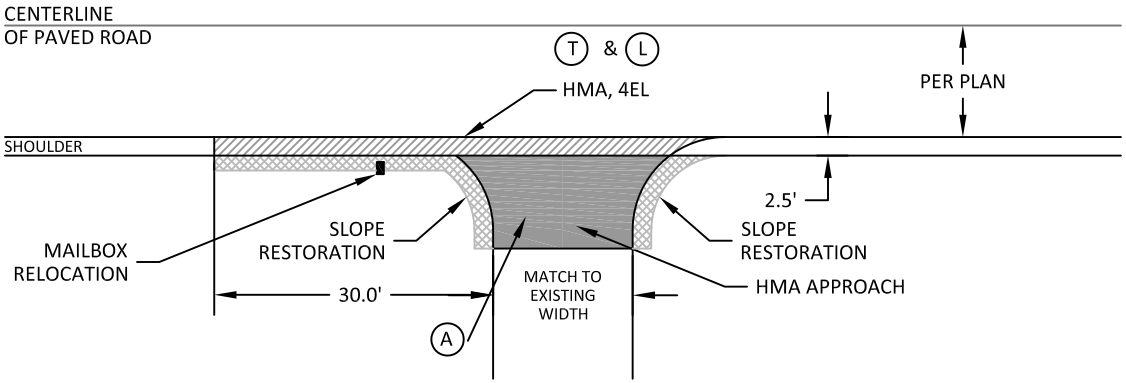

DRIVEWAY DETAILS - PAVED DRIVEWAY WITH MAILBOX TAPER

NO SCALE

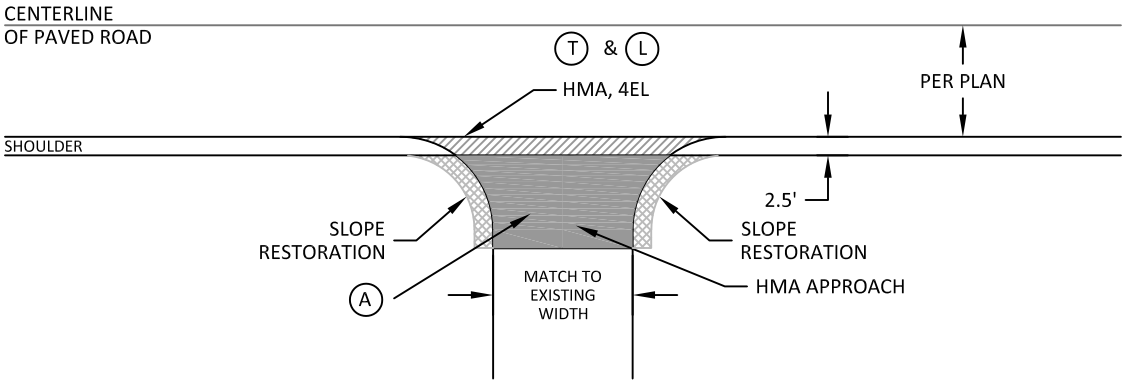

DRIVEWAY DETAILS - PAVED DRIVEWAY

NO SCALE

DATE:
10/12/26

WILLIAMS ROAD

DRIVEWAY DETAILS

EMMET COUNTY ROAD COMMISSION
2265 E HATHAWAY ROAD · HARBOR SPRINGS, MI 49740 · (231) 347–8142

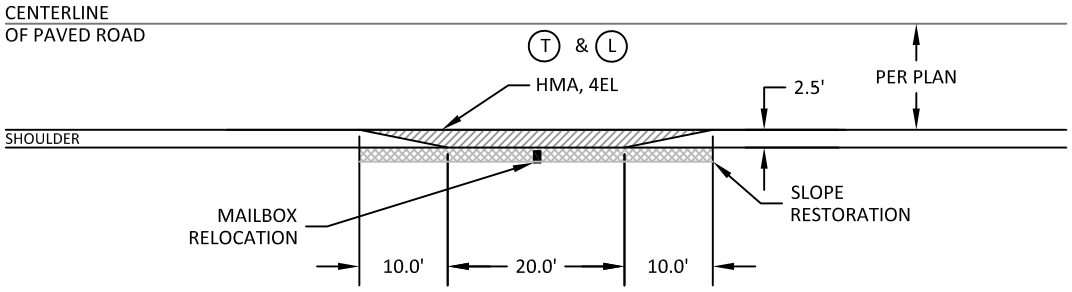

MAILBOX TAPER DETAIL

NO SCALE

DATE:
10/12/26

WILLIAMS ROAD

MAILBOX TAPER DETAIL

EMMET COUNTY ROAD COMMISSION
2265 E HATHAWAY ROAD · HARBOR SPRINGS, MI 49740 · (231) 347–8142

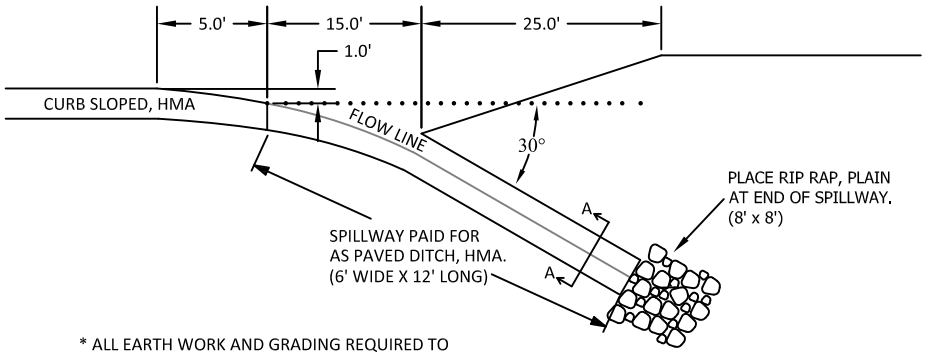

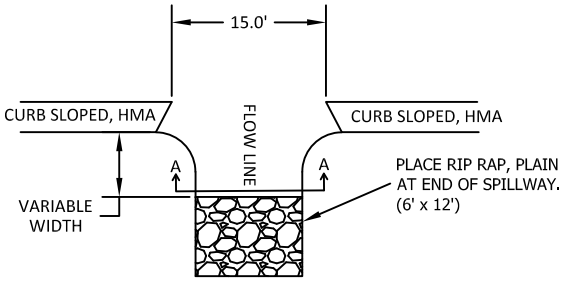

* ALL EARTH WORK AND GRADING REQUIRED TO CONSTRUCT THE SPILLWAY SHALL BE INCLUDED IN THE PAYMENT FOR PAVED DITCH, HMA.

** TOP OF SPILLWAY SHALL NOT BE HIGHER THAN EXISTING GROUND.

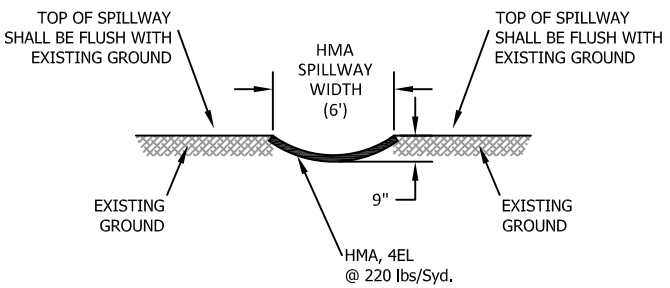

SECTION A - A

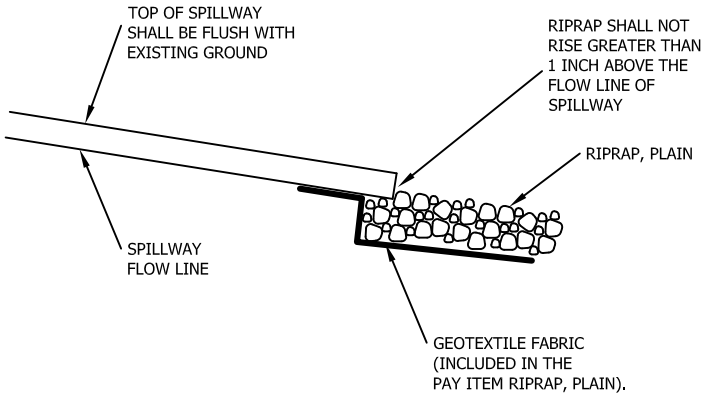

HMA SPILLWAY DETAIL

NO SCALE

DATE:
10/12/26

WILLIAMS ROAD

HMA SPILLWAY DETAIL

EMMET COUNTY ROAD COMMISSION
2265 E HATHAWAY ROAD · HARBOR SPRINGS, MI 49740 · (231) 347–8142

PAVEMENT MARKINGS

Traffic will be maintained by the Contractor during construction, in accordance with the contract Special Provisions and the 2025 Michigan Manual of Uniform Traffic Control Devices, as revised.

All pavement markings, shapes and dimensions shall conform with the Michigan Department of Transportation Pavement Marking Typicals PAVE-905-SERIES, unless otherwise indicated. Pavement Markings shall be placed in accordance with the 2025 Michigan Manual of Uniform Traffic Control Devices. All zoning shall be the responsibility of the contractor. Payment for zoning shall be included in the items for pavement markings.

Item	Quantity	Unit
Pavt Mrkg, Waterborne, 4 inch, White	5100	Ft
Pavt Mrkg, Waterborne, 4 inch, Yellow	5100	Ft

MISCELLEANOUS ITEMS OF WORK

Mailboxes

Relocate all mailboxes so that the face of the mailbox is 14.0' – 14.5' from the road centerline. The Contractor is responsible to install the mailboxes at the appropriate height. Position 41" to 45" from the road surface to the bottom of mailbox or point of mail entry. Minimum post embedment is 2.0 feet. All posts must meet MDOT requirements for mailbox posts (see Special Detail R-74-SERIES). All mailbox posts shall be replaced with a new post unless directed by the Engineer. Costs for relocation of mailboxes, replacement posts, replacement mailboxes and disposal of old posts and mailboxes will be included in the pay item **Post, Mailbox**.

Monument Preservation

All government corners on the project shall be preserved, whether shown or not. It may be necessary to place or adjust monument boxes, as required.

The following items shall be used as they apply throughout the entire project.

Item	Quantity	Unit
Mobilization, Max $41,600	1	LSUM
Post, Mailbox	6	Ea
Monument Box	1	Ea
Monument Preservation	1	Ea

GENERAL NOTES

All work being performed will be conducted in the safest manner possible and appropriate PPE shall be used at all times. All work shall be done in accordance with the Michigan Department of Transportation 2020 Standard Specification for Construction. Contractor assumes all responsibilities for Quality Control (QC) to assure the plans and specifications are met per the contract and to provide professional craftsmanship in each task being performed. Any errors in

plans or discrepancies found in the field shall be brought to the engineer's attention immediately. All materials shall meet the requirements of the Michigan Department of Transportation Materials Source Guide.

The Emmet County Road Commission, in accordance with Title VI of the Civil Rights Act of 1964, 78 Stat. 252, 42 U.S.C 2000d to 2000d-4 and Title 49, Code of Federal Regulations, Department of Transportation, Subtitle A, Office the Secretary, Part 21, Nondiscrimination in Federally assisted programs of the Department of Transportation issued pursuant to such Act, hereby notifies all bidders that it will affirmatively insure that in any contact entered into pursuant to this advertisement, minority business enterprises will be afforded full opportunity to submit bids in response to this invitation and will not be discriminated against on the grounds of race, color, or national origin in consideration for an award.

MISS DIG / Underground Utility Notification

For the protection of underground utilities and in compliance with MCL 460.171 et seq, the Contractor shall contact MISS DIG System, Inc. by phone at 811 or 800-482-7171 or via the web at either elocate.missdig.org for single addresses or rte.missdig.org, a minimum of 3 working days prior to excavating, excluding weekends and holidays.

AT&T
Jeff Collard
(231) 347-8010

DTE
Matt Logan
(231) 258-3785

CENTURY LINK
Lance Gow
(231) 548-9930

GREAT LAKES ENERGY
William LaTourneau
(231) 487-1339

TRUE STREAM
Jeff Wilhelm
(231) 487-1356

CHARTER COMMUNICATIONS
Construction Coordinator
(616) 402-2700

CONSUMERS ENERGY
Dale Jacobs
(989) 370-6570

The existing utilities listed above and, on the plans, represent the best information available. This information does not relieve the Contractor of the responsibility to be satisfied as to its accuracy and the location of existing utilities.

Dust Control

The Contractor shall be responsible for controlling the dust on this project. Payment for Dust Control shall be paid for in other items. Dust shall be continuously controlled to the satisfaction of the Engineer.

Soil Erosion Measures

The Contractor shall implement and maintain the soil erosion control measures as shown on the plans before and at all times during construction of this project. All SESC measures shall conform to current MDOT standards, manufacture guidelines and established best practices.

Daily inspections shall be made by the Contractor; periodic inspections shall be made by the Engineer to determine the effectiveness of the SESC measures. Any required corrections shall be made without delay.

All permanent erosion control measures shall be permanently maintained by the Emmet County Road Commission.

Site Cleanup

The Contractor shall keep the work site clean of trash and other debris. At the end of each day, the project shall be inspected, and all trash removed. No payment shall be made for this work.

Bonding Requirements

The successful Contractor shall furnish a performance bond equal to the contract price as assurance for faithful contract performance.

The Contractor shall also furnish a separate ***surety bond*** equal to the contract price as security for payment to all persons performing labor and furnishing materials in connection with this contract. The Contractor shall pay the premium for all bonds.

The bonds must meet requirements of Michigan Law.

Bonds shall be submitted and approved before contract execution.

Insurance requirements

The Contractor shall furnish proof of general liability insurance in amounts not less than $2,000,000 each occurrence and general aggregate, proof of automobile liability in amounts not less than $2,000,000 combined single limit for each accident, bodily injury per accident, and property damage per accident, and in amount not less than $1,000,000 for bodily injury per person. Such proof of insurance shall include a valid certificate of insurance demonstrating that the Emmet County Road Commission is additional insured party on the policy. Such insurance shall cover a period not less than the term of the project and shall provide that it cannot be cancelled without 30 days advanced written notice to the Emmet County Road Commission, by certified mail, first class, return receipt requested. The Contract/Project Agreement will be invalid if insurance expires during the authorized period of work described.

In addition to any liability or obligation by the Contractor that may otherwise exist, Contractor shall, to the fullest extent permitted by law, indemnify and hold harmless the Emmet County Road Commission and its commissioners, officers, agents and employees from and against any and all claims, actions, proceedings, liabilities, losses, and damages thereof, and any and all costs and expenses, including legal fees, associated therewith which the Emmet County Road Commission may sustain by reason of claims for or allegations of negligence or violation of the terms and conditions of the Contract/Project Agreement, arising out of the work which is subject of the Contract.

Liquidated Damages

Liquidated damages will be assessed for failure to complete this project by the specified date, or by the allowed number of days specified once work begins, due to lack of effort, poor organization or ability to perform on the Contractor's part. Liquidated Damages may be waived by the Project Engineer. Liquidated damages will be assessed according to the table below:

Project Award Amount	Liquidated Damages
$0 - $150,000	$500 per Calendar Day
$150,001 - $500,000	$750 per Calendar Day
Over $500,000	$1,000 per Calendar Day

BID SHEET

Board of Emmet County Road Commissioners
2265 East Hathaway Road
Harbor Springs, MI 49740

The undersigned proposes to furnish any and all materials, labor, and equipment necessary for the reconstruction of Williams Road as spelled out in the "Invitation to Bid" for the prices below.

The Emmet County Road Commission reserves the right to reject any and/or all bids based on what is in the best interest of Emmet County.

Contractor Name:_____

Project:
B153 – Williams Road

Item	Quantity	Unit	Unit Price	Total
Mobilization, Max $41,600	1	LSUM		
Culv, Rem, Less than 24 inch	1	Ea		
Excavation, Earth	4625	Cyd		
Subbase, CIP	2774	Cyd		
Aggregate Base	2500	Ton		
Approach, Cl I	177	Ton		
Shld, Cl II	180	Ton		
Geotextile, Stabilization	8304	Syd		
Road Grade Biaxial Geogrid	8304	Syd		
Culv, Cl A, 15 inch	55	Ft		
HMA Surface, Rem	184	Syd		
HMA Approach	105	Ton		
HMA, 4EL	1621	Ton		
Curb Slp, HMA	2700	Ft		
Post, Mailbox	6	Ea		
Pavt Mrkg, Waterborne, 4 inch, White	5100	Ft		

Pavt Mrkg, Waterborne, 4 inch, Yellow	5100	Ft		
Traffic Control, Max $10,200	1	LSUM		
Riprap, Plain	70	Syd		
Paved Ditch, HMA	70	Syd		
Slope Restoration, Non Freeway, Type A	5000	Syd		
Monument Box	1	Ea		
Monument Preservation	1	Ea		
TOTAL PROJECT COST ESTIMATE =				

Bidder: _____ Address: _____

_____ _____

Signature: _____ Phone No.: _____

Printed Name: _____ Date: _____

Title: _____ Email: _____

Emmet County Road Commission
Special Provision
For
HMA Mixture Acceptance

ECRC: RBS 01/03/22

a) **Description**

This Special Provision provides acceptance-testing requirements for use on this project. The HMA mixture shall be provided to meet the requirements of the standard specifications for construction except where modified herein. The HMA mixture quality assurance and acceptance shall conform to Section 501 of the 2020 Michigan Department of Transportation Standard Specifications for Construction except where modified herein. The MDOT HMA Production Manual, current edition, applies to this work.

b) **Submittals**

The contractor shall submit the following:

1. Job Mix Formula (MDOT Form 1911 or equivalent) for the project for review and approval by the Engineer. The Contractor shall not place any HMA without an approved JMF. Below are specific values that are required on the JMF (in addition to the normal requirements).
    a. Fine Aggregate Angularity
    b. RAP Tiering based on JMF values
    c. Fines to Asphalt Ratio (based on Effective Asphalt Content)
    d. Soft Particle Percentage of each JMF Aggregate Type
2. Quality Control Plan.
3. A copy of all Contractor Quality Control Tests submitted within 7 working days of projection completion.
4. A copy of the Bill of Lading or Delivery Ticket for the Asphalt Binder for the project. The Bill of Lading must include the type of material that was previously hauled in the delivery tank.

c) **Materials**

Aggregates, mineral filler (if required), and asphalt binder shall be combined as necessary to produce a mixture proportioned within the master gradation limits and meeting the uniformity tolerances listed Table 1 and the quality assurance testing tolerances in Table 2 of this special provision. The master gradation range is to be used for establishing mix design only. Topsoil, clay or loam shall not be added to aggregates used in plant produced HMA mixtures.

The Maximum Percentage of Soft Particles for any given HMA mixture shall be 5%.
The Minimum Fine Aggregate Angularity for any given HMA mixture shall be 40.0.
The Minimum Crush Percentage for 4EL and 5EL HMA mixtures shall be 65%.

Table A: HMA Mixture Targets and Parameters

HMA Mix Type	VMA Minimum on any given Test (a,c)	VMA Target (c)	Asphalt Binder Content Minimum on JMF	Asphalt Binder Content Minimum on any given Test (a)	Fines to Asphalt Ratio Maximum on JMF (b)
4EL	14.0	Based on mix design parameter, the contractor shall establish & state their VMA Target on their mix design JMF, and shall adhere to the VMA Min. requirements	5.80	5.50	1.10
5EL	15.0		6.10	5.80	1.10
Ultra-Thin	15.5		6.00	5.70	1.20

a. The HMA parameter minimum is per any given QC/QA test, regardless of Tolerances listed in Table 2 of this Special Provision.
b. Value based on Pbe (Effective Asphalt Percent) for each given mix and JMF.
c. VMA values are based on the Gsb (Bulk Specific Gravity) of the given HMA mixture not the Gse (Effective Specific Gravity).

Table B: HMA Mixture Targets and Parameters Cont'd (Ultra-Thin)

Superpave Air Voids (%)	4.5
Superpave Gyrations	35
Fine Aggregate Angularity (Min.)	40.0
Percent Crush (Min. %)	50.0
Aggregate Wear Index (AWI)	220
Sieve Size	**Total % Passing**
1/2 inch	100
3/8 inch	99-100
No. 4	75-95
No. 8	55-75
No.30	25-45
No. 200	3-8

d) **Asphalt Binder**
Liquid Asphalt Binder shall be a Performance Graded (PG) binder as specified in the bid HMA Application Table in the bid specifications and/or as included on the plans. If not specified, then the following apply:

Table C: Asphalt Binder Selection

4EL	PG 58-28
5EL	PG 58-28
Ultra-Thin	PG 58-28

e) **Air Voids**
Design Air Voids shall be 4.0% and shall be regressed to 3.0% in production **by the addition of virgin liquid asphalt (4EL and 5EL).**

f) **Recycled Asphalt Materials**

Recycled Asphalt Shingles (RAS) will not be allowed in the HMA Mixtures.

Recycled Asphalt Pavement (RAP) is allowed in the HMA mixtures subject to the following requirements. Binder replacement will be determined by weight. ***The use of Reclaimed Asphalt Pavement (RAP) shall be limited to Tier 1 (0% to 17%) RAP binder by weight of the total binder in the mixture, for all mixes (4EL, 5EL, and Ultra-Thin).***

Tier 1 – 0.0% to 17.0% RAP binder by weight of the total binder in the mixture
No binder grade adjustment is required to compensate for the stiffness of the asphalt binder in the RAP.

g) **Construction**
After the Job Mix Formula is established, the aggregate gradation of the HMA mixture furnished for the work shall be maintained within the Range 1 uniformity tolerance limits permitted for the job-mix-formula specified in Table 1. However, if deviations are predominantly below or above the job-mix-formula, the Engineer may order alterations in the plant to bring the mixture to the job-mix-formula. If two consecutive aggregate gradations on one sieve as determined by the field tests are outside Range 1 but within Range 2 tolerance limits, the Contractor shall suspend all operations. Contract time will continue during these times when the plant is down. Before resuming any production, the Contractor shall propose, for the Engineer's approval, all necessary alterations to the materials or plant so that the job-mix-formula can be maintained. The Engineer, after evaluating for effects on AWI and mix design properties, will approve or disapprove such alterations.

The crushed particle content of the aggregate used in the HMA mixture shall not be more than 10 percentage points below the crushed particle content used in the job-mix-formula nor less than the minimum specified for the aggregate in the project documents.

Random Liquid Asphalt Binder samples will be witnessed by the Engineer or Consulting Firm. The Engineer reserves the right to test any or all samples taken.

Quality Assurance and Acceptance testing will be as follows:

1. **Asphalt Mixture Sampling**
   Acceptance sampling and testing will be performed by the Engineer using the sampling method and testing option agreed upon by the Engineer and Contractor. Each day of production, random samples will be obtained for each mix type. Acceptance testing will be performed at a frequency specified by the Engineer.

   For each given day of production, if the daily mix tonnage per HMA mix type is under 500 tons, the Engineer reserves the right to test one sample and obtain a second sample for future testing if necessary. If the daily mix tonnage per HMA mix type is over 500 tons, the Engineer reserves the right to test one sample. If the first sample meets the Range 1 tolerances in Table 1 and Table 2, the Engineer can obtain a second sample and perform any of the following actions:
   a. Perform Full Quality Assurance testing
   b. Perform Volumetric Testing Only (Ignition, Extracted, or Calculated AC/Gmm, Air Voids, VMA)
   c. Retain custody of the sample for future testing if necessary

2. **Asphalt Binder Sampling**
   The Contractor shall obtain the asphalt binder sample, correctly label the sample container and complete a Sample Identification (Bituminous Material Form 1923B). The form must be filled out correctly, completely, and signed before the sample is given to the Engineer. The daily asphalt binder sample must be taken from a sampling spigot located on the pipeline supplying asphalt binder to the plant, in a position between the asphalt binder pump and the point where the asphalt binder is introduced to the aggregate mixture. Personnel safety is critical when collecting the sample from the sampling spigot. Give the binder sample and completed Form 1923B to the Engineer.

   Daily Asphalt Binder Sample are to be in 1 pint (16 ounce), slip top, seamless ointment tins. The tin must be at least three quarters full. All containers must be labeled in a legible format with the following information provided:
   a. Project Name
   b. Binder Grade
   c. Binder Supplier Certification Number
   d. Supplier Name, City, and State
   e. Date Sampled
   f. Mixture Type

   The Engineer may request to witness the sampling of the asphalt binder upon visit to the HMA Plant. The Engineer will complete the 1923B Form for the witness sample. The witness sample will be recorded as the daily asphalt binder sample. Any other asphalt binder samples from that same day will be discarded.

The Engineer may request a copy of the MDOT Binder Certification Documents. These copies must be presented to the Engineer when the respective daily binder samples and the 1923B Forms are picked up at the plant. The Engineer will review these documents and communicate any problems that may arise.

3. **Mixture Testing**
Mixture samples will be tested to verify gradation, binder content, and volumetric properties per Table 1 and Table 2 listed below.

If the Engineer elects not to perform Quality Assurance testing on a given day or a given project. The Contractor is required to still perform testing in accordance with Table 1 and Table 2 below. The Contractor's Quality Control test results shall be sent to the Engineer within 2 working days of each day's productions for a given HMA mixture.

Table 1: Quality Assurance/Control Tolerance Limits for HMA Mixtures

Parameter	Action Limits (Range 1)	Suspension Limits (Range 2)
% Passing the #8 and Larger Sieves	+/- 5.0%	+/- 8.0%
% Passing the #30 Sieve	+/- 4.0%	+/- 6.0%
% Passing #200 Sieve	+/- 1.0%	+/- 2.0%

Table 2: Quality Assurance/Control Testing Tolerance (+/-) from JMF or Target Values

Parameter	Action Limits (Range 1)	Suspension Limits (Range 2)
Binder Content (a)	0.30% (a)	0.50% (a)
Maximum Specific Gravity (Gmm)	0.013	0.020
Voids in Mineral Aggregate VMA (a,b)	0.75% (a,b)	0.80% (a,b)
Air Voids (c)	0.60%	0.90%
Fines to Effective Asphalt Ratio	0.65-1.20	0.60-1.25

a. Refer to minimum parameters in Table A of this special provision.
b. These given limits are (+/-) from given targets in Table A of this special provision.
c. Limits are (+/-) from JMF/Target Values listed in Section e. and Table B of this special provision.

4. **Density**
Pavement density will be measured by the Engineer, with a Nuclear Density Gauge, using the Gmm from the JMF for the density control target. The in-place density of the HMA mixture shall be at least 92.0% of the density control target. In-place density will be calculated by averaging four QA density test locations. Test locations will not be taken within 12 inches of any pavement edges or pavement joints.

h) **Rejected Materials**

1. **Gradation**

   Action Limits - Range of values established in Table 1 – Quality Assurance/Control Tolerance Limits for HMA Mixtures. If exceeded on two consecutive tests, Contractor is required to take corrective action to bring the mixture produced into conformance with the specifications.

   Suspension Limits – Range of values established in Table 1 – Quality Assurance/Control Tolerance Limits for HMA Mixtures. If exceeded on a single test, Contractor is required to suspend operations and determine, document, and correct the cause before resuming production. Prior to resuming production, the Engineer must be notified of the findings and approve correction action prior to resuming production.

2. **Asphalt Binder**
   If a liquid asphalt binder sample does not meet the required specification, the mix produced from the point of the last liquid asphalt binder sample meeting specification to the failed sample shall be considered defective and shall be replaced at the sole expense of the Contractor.

3. **Volumetric Properties**
   The acceptable tolerance for Binder Content, Gmm, VMA, Air Voids, and Fines to Pbe are listed in Table 2 above. Any HMA Mixture produced outside of these tolerances or any HMA Mixture that does not meet the requirements listed in the sub notes of Table 2 above will be subject to a negative adjustment or rejected. The resulting penalty will be a negative adjustment of 10% to 50% or remove/replace, to be determined by the Engineer.

4. **Pavement Density**
   A negative 10% adjustment in the HMA Mixture contract price will be imposed if the pavement density (average of all gauge readings) is less than 92%, but equal to or greater than 91%; or if 2 or more readings are less than 91%.

   A negative 25% adjustment in the HMA Mixture contract price will be imposed if the pavement density (average of all gauge readings) is less than 91%, but equal to or greater than 90%; or if 2 or more readings are less than 90%.

   If the average density is less than 90% (for all gauge readings), the Contractor shall remove and replace the pavement at no cost to the Owner.

20TM816-A385-05: 08-19-25

MICHIGAN
DEPARTMENT OF TRANSPORTATION

SPECIAL PROVISION
FOR

SLOPE RESTORATION, NON-FREEWAY

RSD:NJM 29 of 31 APPR:DMG:KJK:08-19-25

a. Description. This work consists of preparing all lawns and slopes on non-freeway projects designated for slope restoration on the plans or as directed by the Engineer and applying topsoil, fertilizer, seed, mulch with mulch anchor, mulch blanket, high velocity mulch blanket, permanent turf reinforcement mat, bonded fiber matrix, or modified mulch blanket to those areas. Ensure turf establishment is in accordance with section 816 and 917 of the Standard Specifications for Construction and Standard Plan R-100 Series, except as modified herein or otherwise directed by the Engineer.

b. Materials. The materials, application rates, and construction methods specified in sections 816 and 917 of the Standard Specifications for Construction apply unless modified by this special provision or otherwise directed by the Engineer. Furnish the following materials on this project:

1. Seeding mixture as called for on the plans.

2. Chemical fertilizer nutrient, Class B.

3. Topsoil. The following percentages of furnished and salvaged topsoil are estimated for this project and provided for informational purposes only.

Topsoil Furnished: 100 percent

Topsoil Salvaged: 0 percent

4. Mulching materials.

c. Construction. Ensure construction methods are in accordance with subsection 816.03 of the Standard Specifications for Construction. Begin this work as soon as possible after final grading of the areas shown on the plans for slope restoration but no later than the time limitations in accordance with subsection 208.03.B of the Standard Specifications for Construction. It may be necessary, as directed by the Engineer, to place materials by hand.

Shape, compact, and ensure all areas to be seeded are weed-free prior to placing topsoil. Place topsoil to the minimum depth of 4 inches and in accordance with the plans and standard specifications to meet proposed finished grade. If the area being restored requires more than the minimum depth of topsoil to meet finished grade, fill this additional depth using topsoil or, at the Contractor's option, embankment. Furnishing and placing this additional material is included in this item of work for slope restoration.

Ensure topsoil is weed and weed seed free and friable prior to placing seed. Remove any stones greater than 1/2-inch in diameter or other debris. Apply seed mixture and fertilizer to prepared soil surface at the specified rates. Incorporate seed into top 1/2-inch of topsoil.

Spread mulch at a rate of two tons per acre. If the Engineer allows dormant seeding spread mulch at a rate of 3 tons per acre. Place mulch anchoring over the mulch at a rate in accordance with subsection 816.03.F of the Standard Specifications for Construction. Place mulch blanket and high-velocity mulch blanket in accordance with subsection 816.03.G of the Standard Specifications for Construction and Standard Plan R-100 Series.

Install areas constructed with the TRM on prepared (seeded) grades as shown on the plans in accordance with the manufacturer's published installation guidelines. Anchor the top edge of the TRM in a minimum six-inch deep trench. Operation of equipment on the slope is prohibited after placement of the TRM. No credit for splices, overlaps, tucks, or wasted material will be made.

Mix the BFM and organic binders thoroughly at a rate of 40 pounds for each 100 gallons of water or as otherwise recommended by the manufacturer. Hydraulically apply the BFM slurry in successive layers, from two or more directions, to fully cover 100 percent of the soil surface. Ensure the minimum application rate is at least 3000 pounds of BFM for each acre or otherwise apply in accordance with the manufacturer's recommendations as appropriate depending on site conditions.

Do not apply BFM on saturated soil or immediately before, during, or after rainfall.

Install modified mulch blanket in accordance with the manufacturer's published guidelines and as directed by the Engineer.

If an area washes out after this work has been properly completed and approved by the Engineer, make the required corrections to prevent future washouts and replace the topsoil, fertilizer, seed, and mulch treatment. This replacement will be paid for as additional work using the applicable pay items.

If an area washes out for reasons attributable to the Contractor's activity or failure to take proper precautions, replacement will be at no cost to the contract.

The Engineer will inspect the seeded turf to ensure it is well-established, in a vigorous growing condition, contains the species called for in the seeding mixture and acceptance is in accordance with subsection 816.03.K of the Standard Specifications for Construction.

If the seeded turf is not well-established at the end of the first growing season, the Contractor must reseed as detailed herein until the turf is well established and approved by the Engineer at no cost to the contract.

Provide weed control, if weeds are determined by the Engineer to cover more than 10 percent of the total area of slope restoration, in accordance with subsection 816.03.I of the Standard Specifications for Construction. Weed control will be at no additional cost to the contract.

d. Measurement and Payment. The completed work, as described, will be measured and paid for at the contract unit price using the following pay items:

Pay Item	**Pay Unit**
Slope Restoration, Non-Freeway, Type __	Square Yard

1. Place **Slope Restoration, Non-Freeway, Type A** in all areas not described in the other types of slope restoration and will be measured by area in square yards in place. **Slope Restoration, Non-Freeway, Type A** includes installing Topsoil Surface; Fertilizer, Chemical Nutrient; seeding mixture; Mulch; and Mulch Anchoring.